TW01
EN
VERSION

MODULAR CLAMPING SYSTEMS

Twin Vices

www.omlspa.it

Twin Vices from OML - SMW AUTOBLOK

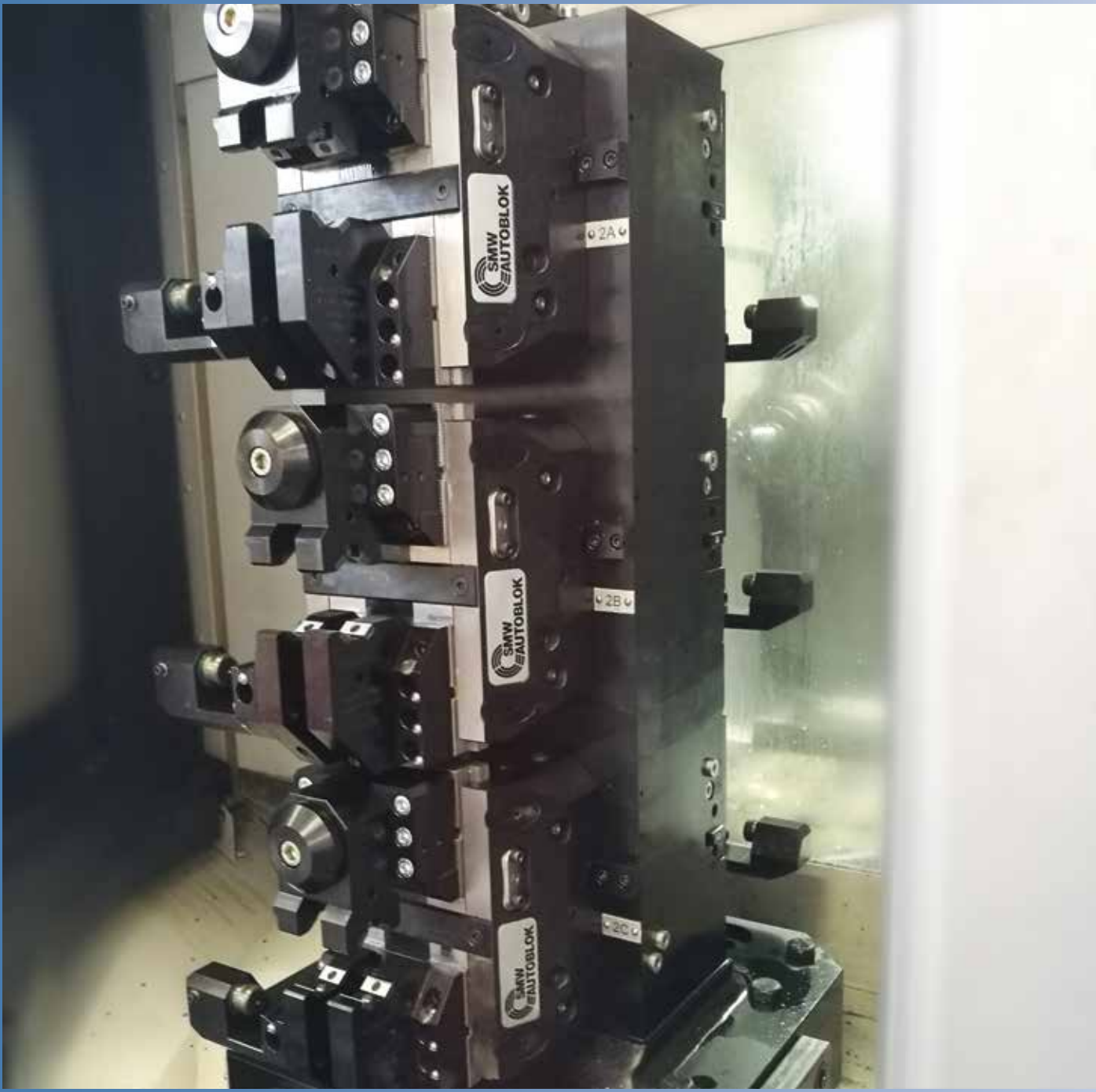

Twin Vices

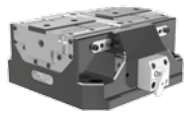

Page 6

STV-2

Spring and air operated vice 125, 180, 225

- Protected
- Springs to clamp, pneumatic to open
- Turbo function to increase the clamping forces
- Pneumatic jaw stroke control valve
- Normal stroke: STV-2N / Long stroke: STV-2L
- Air purge
- Air sensing

Page 8

STV-3

Spring and air operated vice 125, 180, 225

- Protected
- 3 jaws
- Springs to clamp, pneumatic to open
- Turbo function to increase the clamping forces
- Normal stroke: STV-3N
- Pneumatic jaw stroke control valve
- Air purge

Page 12

TVP

Pneumatic vice 100, 160, 200, 250, 315

- Normal stroke: TVP-N
- Long stroke: TVP-L
- Fixed jaw: TVP-F
- Air purge

Page 14

TVH

Hydraulic vice 100, 160, 200

- Normal stroke: TVH-N
- Long stroke: TVH-L
- Air purge

Page 18

PTP

Protected pneumatic vice 100, 125, 160, 200

- Protected against swarf and chips
- Pneumatic version
- Normal stroke: PTP-N / Long stroke: PTP-L
- Fixed jaw: PTP-F
- Pneumatic jaw stroke control valve
- Air purge
- Air sensing

Page 20

PTH

Protected hydraulic vice 100, 125, 160, 200

- Protected against swarf and chips
- Hydraulic version
- Normal stroke: PTP-N / Long stroke: PTP-L
- Pneumatic jaw stroke control valve
- Air purge
- Air sensing

Page 23

SL-P

Protected pneumatic vice 100, 160, 200

- Protected against swarf and chips
- Pneumatic version
- Normal stroke
- Air purge
- Air sensing

Page 28

Jaws

Accessories

- Soft blank top jaw
- Tongue & Groove or fine serration 1.5 mm x 60°
- Jaws for SinterGrip

STV

Spring and Air operat

STV-2

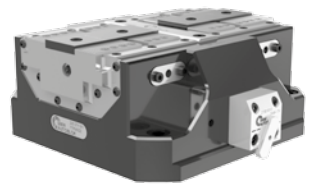

Function:

- Springs to clamp
- Turbo function to increase the clamping forces
- Pneumatic to open

proofline® series
fully sealed – low maintenance

STV-3

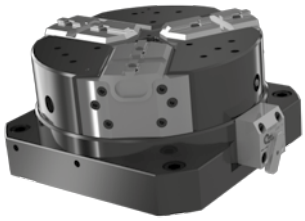

Function:

- Springs to clamp
- Turbo function to increase the clamping forces
- Pneumatic to open

proofline® series
fully sealed – low maintenance

Proximities stroke control

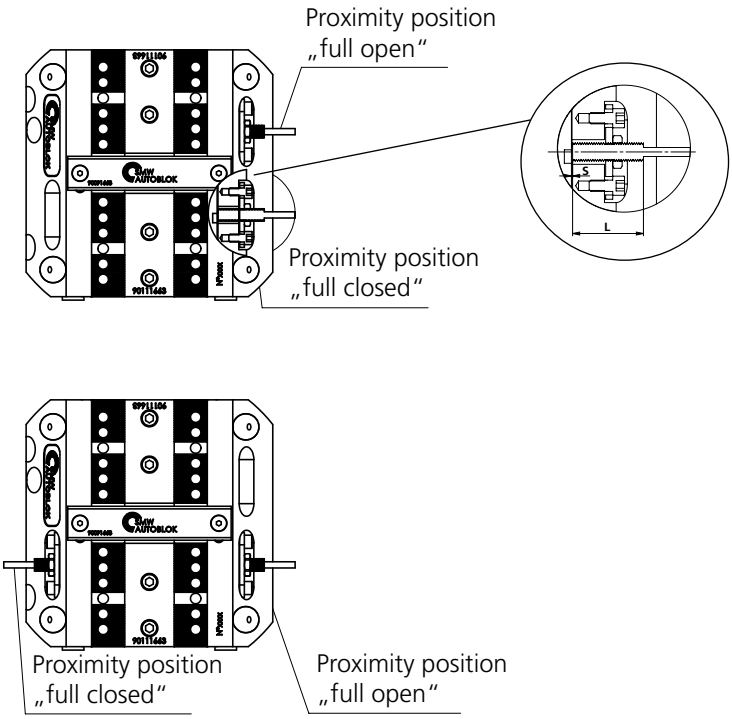

SinterGrip

For lowest clamping depth of workpieces and without pre-marking

ed Power Vices

Convincing advantages

- Protected against contamination of swarf and chips, fully sealed (proofline)
- Compact design
- Highest repeatability
- Highest rigidity
- Housing and functional parts hardened for high precision and long life
- Air purge
- Master jaws with both tongue & groove and fine serration 1.5 mm x 60°
- OD clamping only
- Air sensing (only STV-2)
- Self-centering vice without top jaws
- All bolts and centering bushings included

Industry 4.0 Product

Safety valve SAB-1

- Safety valve SAB-1 to maintain air pressure during pallet transportation/storage and machining without feed
- Easy and smart opening of the vice by air gun
- Turbo function to increase the clamping forces

Pneumatic jaw stroke control valve (optional)

- For the monitoring of the jaw position
- Direct connection through the plate or the tombstone
- No cables needed
- Ideal for automation

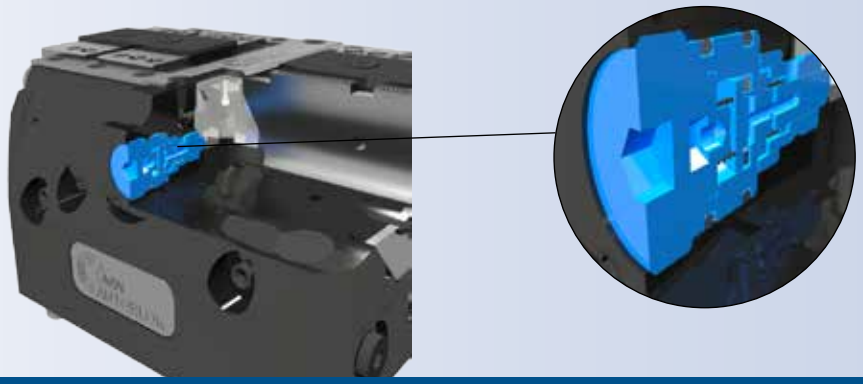

STV-2N

NORMAL STROKE

STV-2L

LONG STROKE

Spring and air operated twin vice

- Protected
- Springs clamping
- Pneumatic jaw stroke control valve

Application/customer benefits

- Protected against contamination of swarf and chips, fully sealed (proofline)
- Compact design
- Highest repeatability
- Highest rigidity

Technical features

- Spring to clamp, pneumatic open
- Increase of the clamping force via Turbo function
- Housing and functional parts hardened for high precision and long life
- Air purge
- Master jaws with both Tongue & Groove and fine serration 1.5 mm x 60°
- OD clamping only
- Safety valve SAB-1 to maintain air pressure during pallet transportation/storage and machining without feed (optional)
- Pneumatic jaw stroke control valve (optional)
- Stroke control via proximity switches (optional)
- Air sensing

Standard equipment

Self-centering vice without top jaws
All bolts and centering bushings included

Actual gripping force diagrams

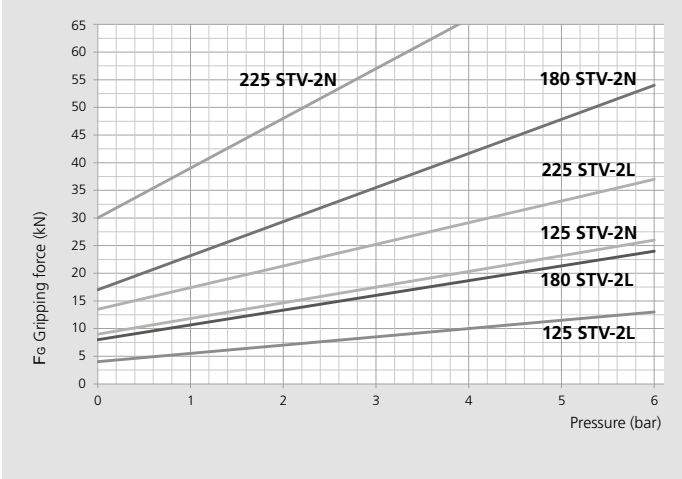

SAB-1 safety valve

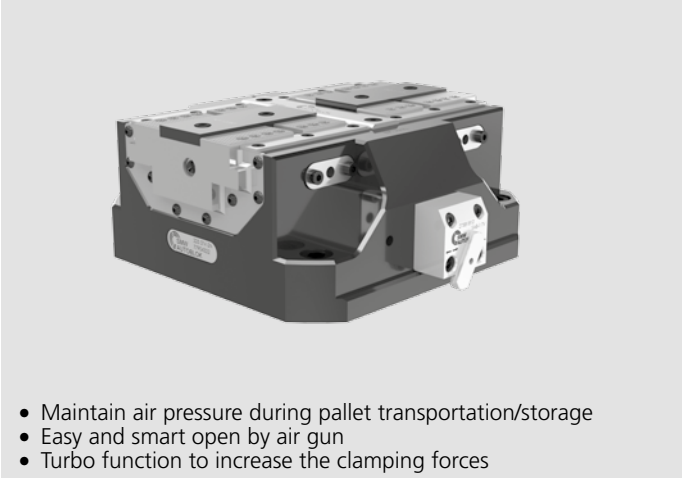

- Maintain air pressure during pallet transportation/storage
- Easy and smart open by air gun
- Turbo function to increase the clamping forces

Technical data

Type	Id. No.	Id. No. incl. SAB-1 valve	Type Stroke	Max. clamping force middle stroke Springs kN	Max. clamping force middle stroke Springs+Turbo kN	Stroke/ Jaw mm	Piston area cm²	Re-opening pressure bar	Ope-rating pressure bar	Repea-tability mm	Weight kg
125 STV-2N	77904312	77904812	Normal	9	26	2.6	78	5	6	0.01	7
125 STV-2L	77904412	77904818	Long	4	13	6	78	5	6	0.01	7
180 STV-2N	77904318	77904822	Normal	17	54	3	170	5	6	0.01	17.5
180 STV-2L	77904418	77904912	Long	8	24	8.4	170	5	6	0.01	17.5
225 STV-2N	77904322	77904918	Normal	30	66	4.2	250	6	4	0.02	28
225 STV-2L	77904422	77904922	Long	13.5	37	10.2	250	6	6	0.02	28

Spring and air operated twin vice

- Protected
- Springs clamping
- Pneumatic jaw stroke control valve

STV-2N
NORMAL STROKE

STV-2L
LONG STROKE

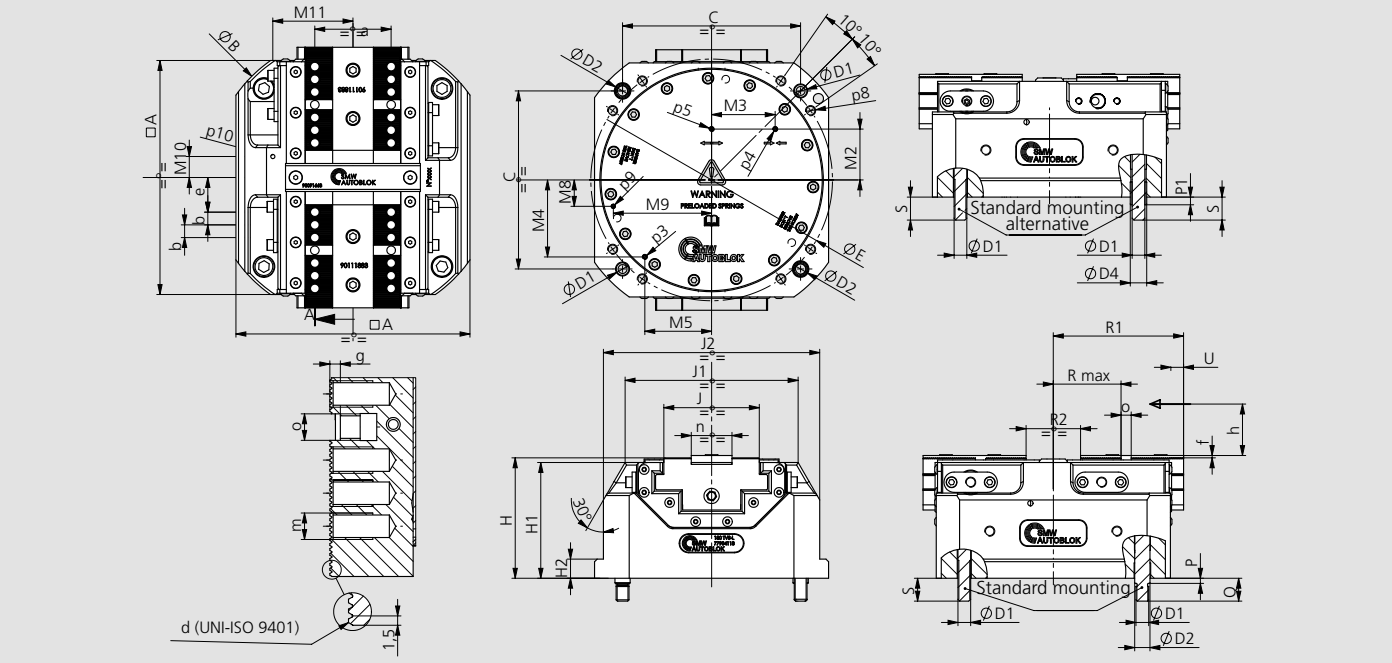

SMW-AUTOBLOK Type			STV-2 125	STV-2 180	STV-2 225
	A	mm	125	184	225
	B(Ø)	mm	162	225	284
	C	mm	100	140	180
	D1(Ø)	mm	M8	M10	M12
	D2 (Øf7)	mm	10	12	14
	D4 (Øjs7)	mm	11	13	16
	E (ø)	mm	136	190	240
	H	mm	80.5	94.7	102
	H1	mm	77	91	98
	H2	mm		15	15
	J	mm	47	75	94
	J1	mm	100	136	172
	J2	mm	125	170	216
	M2	mm	32	40	50
	M3	mm	29.5	50	65
	M4	mm	40.5	60.5	79
	M5	mm	38.5	52.5	63
	P	mm	4	4	5
	P1	mm	4	6	6
	Q	mm	15	18	20
min/max (long stroke)	**R max**	mm	25.6/31.6	44.8/53.2	54.5/64.7
min/max (normal stroke)	**R max**	mm	25.4/28	45/48	54.5/58.7
min/max (long stroke)	**R1**	mm	64.5/70.5	94/102.4	114.5/124.7
min/max (normal stroke)	**R1**	mm	64.4/67	94.5/97.5	114.8/119
min/max (long stroke)	**R2**	mm	20/32	26/42.8	30/50.4
min/max (normal stroke)	**R2**	mm	19.8/25	26/32	30.6/39
	S	mm	15	18	20
long stroke	**U**	mm	6	8.4	10.2
normal stroke	**U**	mm	2.6	3	4.2
	a	mm	35	60	80
	b	mm	7	10	10
serration	**d**	mm	1.5x60°	1.5x60°	1.5x60°
min/max (long stroke)	**e**	mm	14.6/20.6	18.8/27.2	28.5/38.7
min/max (normal stroke)	**e**	mm	14.4/17	19/22	28.5/32.7
	f	mm	1.8	1.8	2
	g	mm	2.7	3.2	4
	h	mm	16	25	35
	m	mm	M6x10	M8x12	M8x12
	n (g6)	mm	20	32	40
	o (H7)	mm	6	8	8
	p3	mm	M4	M4	M4
	p4	mm	M4	M4	M4
	p5	mm	M4	M4	M4
	p8	mm	M6x12	M8x16	M10x18
	p9	mm	M4	M4	M4
	p10	mm	M4	M4	M4
	M8	mm	10.6	20.7	15
	M9	mm	54.5	77.3	99.9
	M10	mm	10.5	16.5	15
	M11	mm	46	63	81

STV-3N

NORMAL STROKE

Spring and air operated twin vice

- Protected
- 3 jaws
- Springs clamping
- Pneumatic jaw stroke control valve

Application/customer benefits

- Protected against contamination of swarf and chips, fully sealed (proofline)
- Compact design
- Highest repeatability
- Highest rigidity

Technical features

- Spring to clamp, pneumatic open
- Increase of the clamping force via Turbo function
- Housing and functional parts hardened for high precision and long life
- Air purge
- Master jaws with both Tongue & Groove
- OD clamping only
- Safety valve SAB-1 to maintain air pressure during pallet transportation/storage and machining without feed
- Pneumatic jaw stroke control valve (optional)

Standard equipment

Self-centering vice without top jaws
All bolts and centering bushings included

Actual gripping force diagrams

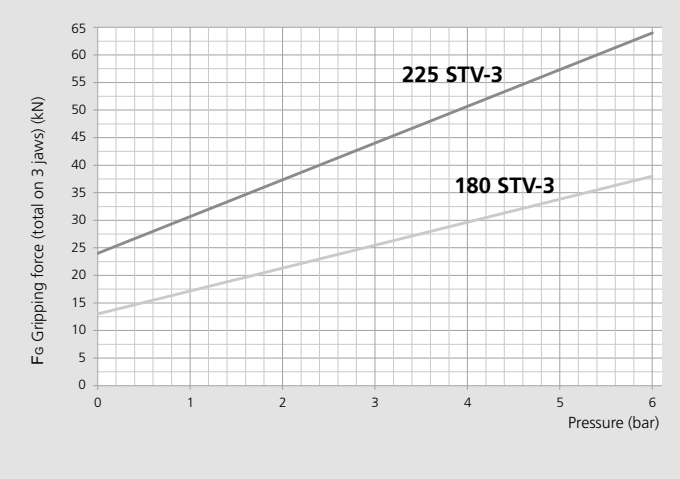

SAB-1 safety valve

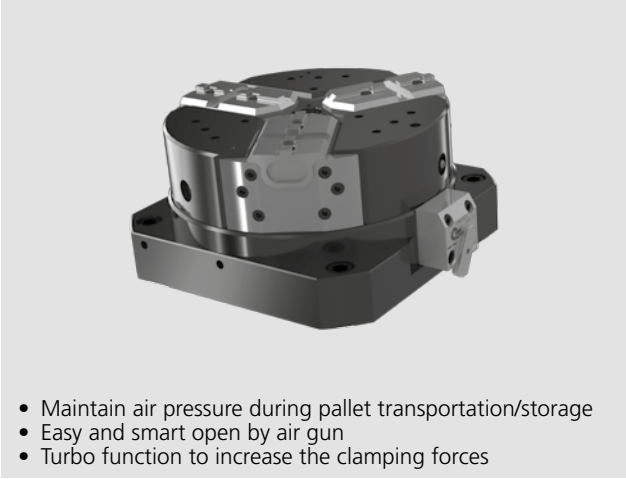

- Maintain air pressure during pallet transportation/storage
- Easy and smart open by air gun
- Turbo function to increase the clamping forces

Technical data

Type	Id. No.	Id. No. incl. SAB-1 valve	Type Stroke	Max. clamping force middle stroke Springs kN	Max. clamping force middle stroke Springs+Turbo kN	Stroke/ Jaw mm	Piston area cm²	Re-opening pressure bar	Ope-rating pressure bar	Weight kg
125 STV-3	on request	on request	Normal							
180 STV-3	77904618	77905018	Normal	13	38	3.8	170	5	6	18
225 STV-3	77904622	77905022	Normal	24	64	4.2	250	6	6	29.5

Spring and air operated twin vice

- Protected
- 3 jaws
- Springs clamping
- Pneumatic jaw stroke control valve

STV-3N

NORMAL STROKE

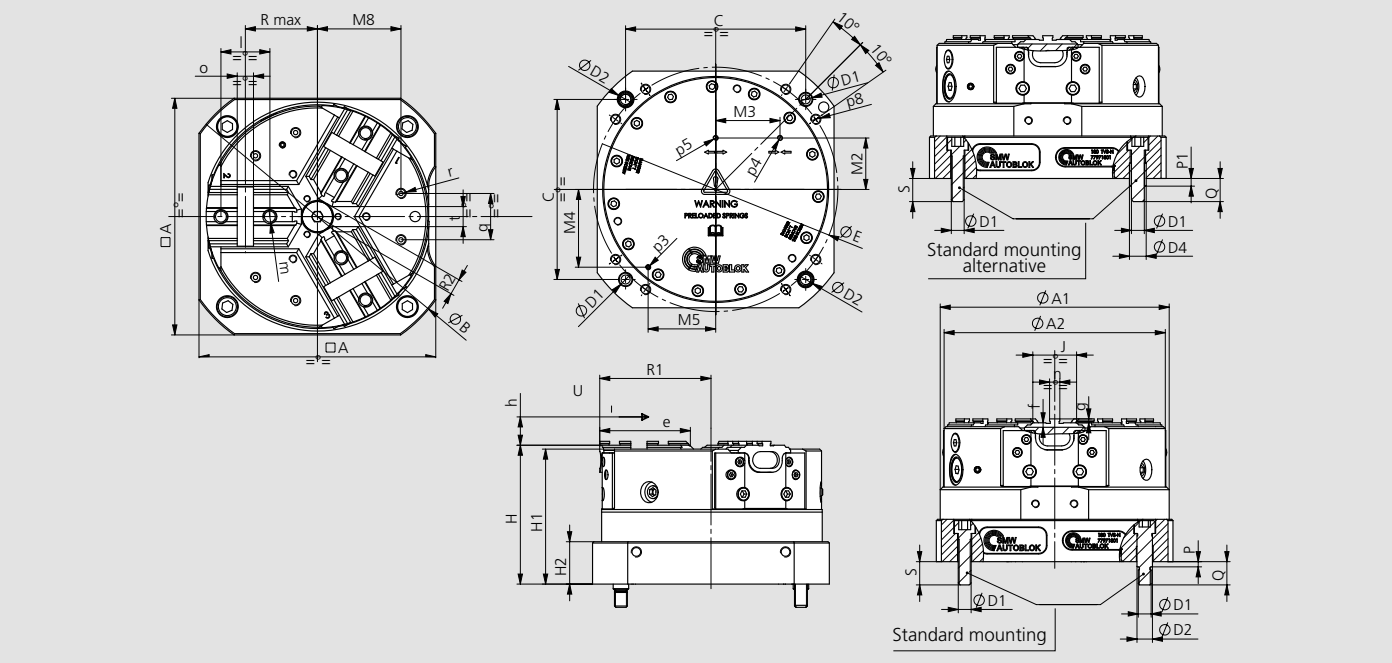

SMW-AUTOBLOK Type			STV-3 180	STV-3 225
	A	mm	184	225
	A1	mm	178	222
	A2	mm	172	216
	B(Ø)	mm	225	284
	C	mm	140	180
	D1(Ø)	mm	M10	M12
	D2 (Øf7)	mm	12	14
	D4 (Øjs7)	mm	13	16
	E (ø)	mm	190	240
	H	mm	108	115
	H1	mm	105	112
	H2	mm	33	38
	J	mm	34	46
	M2	mm	40	50
	M3	mm	50	65
	M4	mm	60.5	79
	M5	mm	52.5	63
	M8	mm	65	80
	P	mm	4	5
	P1	mm	6	6
	Q	mm	18	20
min/max	**R max**	mm	52.2/56	67.8/72
min/max	**R1**	mm	82.7/86.5	103.8/108
min/max	**R2**	mm	8.7/12.5	12.8/17
	S	mm	18	20
	U	mm	3.8	4.2
	e	mm	70	87
	f	mm	3.5	3.5
	g	mm	3	3
	h	mm	25	35
	l	mm	38	44.4
	m	mm	M10x12	M12x14
	n (h8)	mm	7.94	7.94
	o (H7)	mm	12.68	12.68
Air stroke control or Air purge	**p3**	mm	M4	M4
Vice Closed	**p4**	mm	M4	M4
Vice Open	**p5**	mm	M4	M4
	p8	mm	M8x16	M10x18
	q	mm	36	45
	r	mm	M8x10	M8x10
min/max	**t**	mm	9/15.6	13.5/20.9

STV

Spring and air operated twin vice

■ Mounting instruction

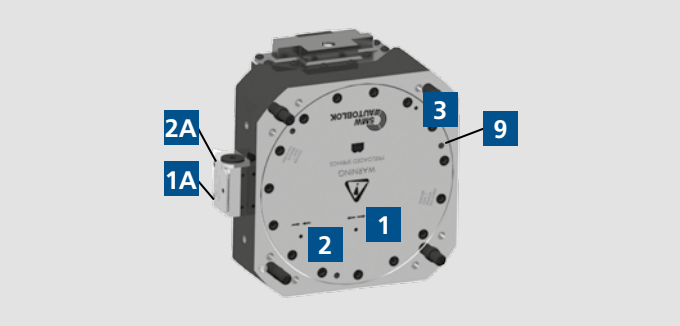

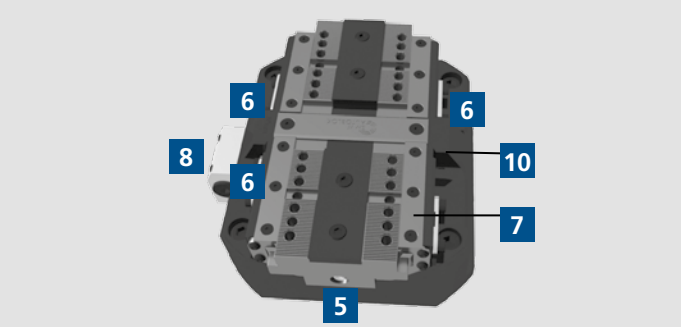

Solution 1 Standard

± 0,03 mm to clamping center

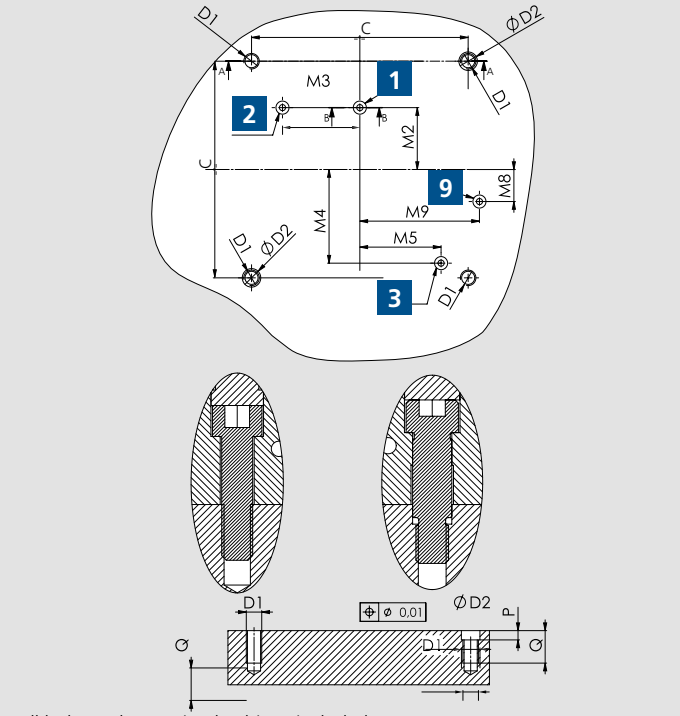

All bolts and centering bushings included

Solution 2 Standard

± 0,025 mm to clamping center

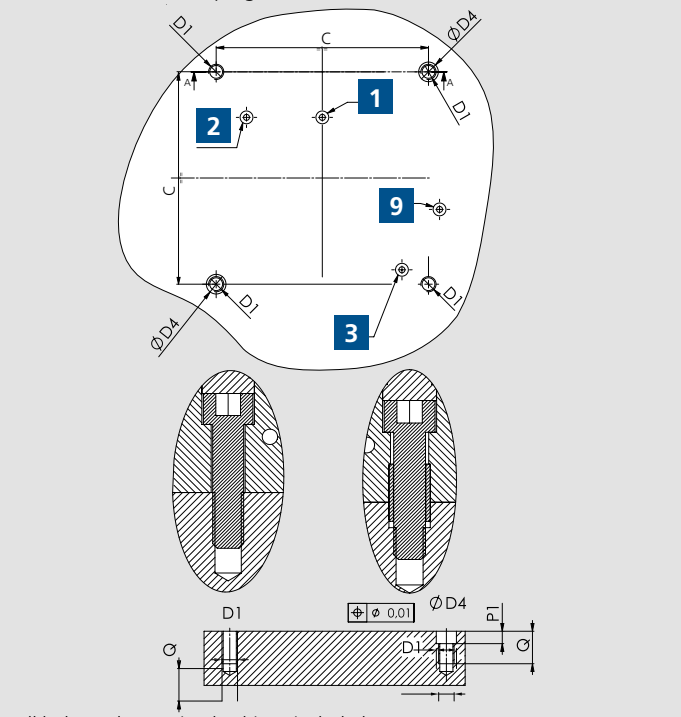

All bolts and centering bushings included

Feeding seats

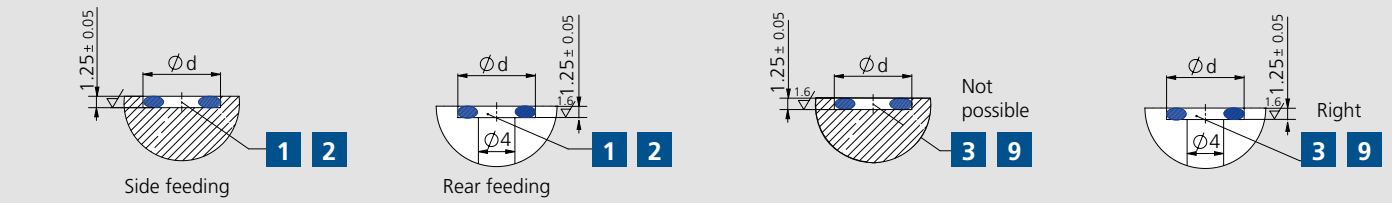

Functional Overview

1	Open-Rear feeding	1A	Open-Side feeding	6	Proximity switches seats	9	Air sensing connection**
2	Closed-Rear feeding	2A	Closed-Side Feeding	7	Pneumatic stroke control valve	10	Air sensing outlet** (under front plate)
3	Pneumatic stroke control or air purge*	5	Lubrication fitting	8	Safety valve		

* The air purge can be used only without the valve.

**9 and 10 Points available only on 2 jaws version.

Type	C	D1	D2 H7	D4 H7	M2	M3	M4	M5	M8	M9	P	P1	Q	Ød	OR
STV 125	100	M8	10	11	32	29.5	40.5	38.5	10.6	54.5	6	6	18	8	OR2018
STV 180	140	M10	12	13	40	50	60.5	52.5	20.7	77.3	6	7	21	8.8	OR2021
STV 225	180	M12	14	16	50	65	79	63	15	99.9	7	7	24	8.8	OR2021

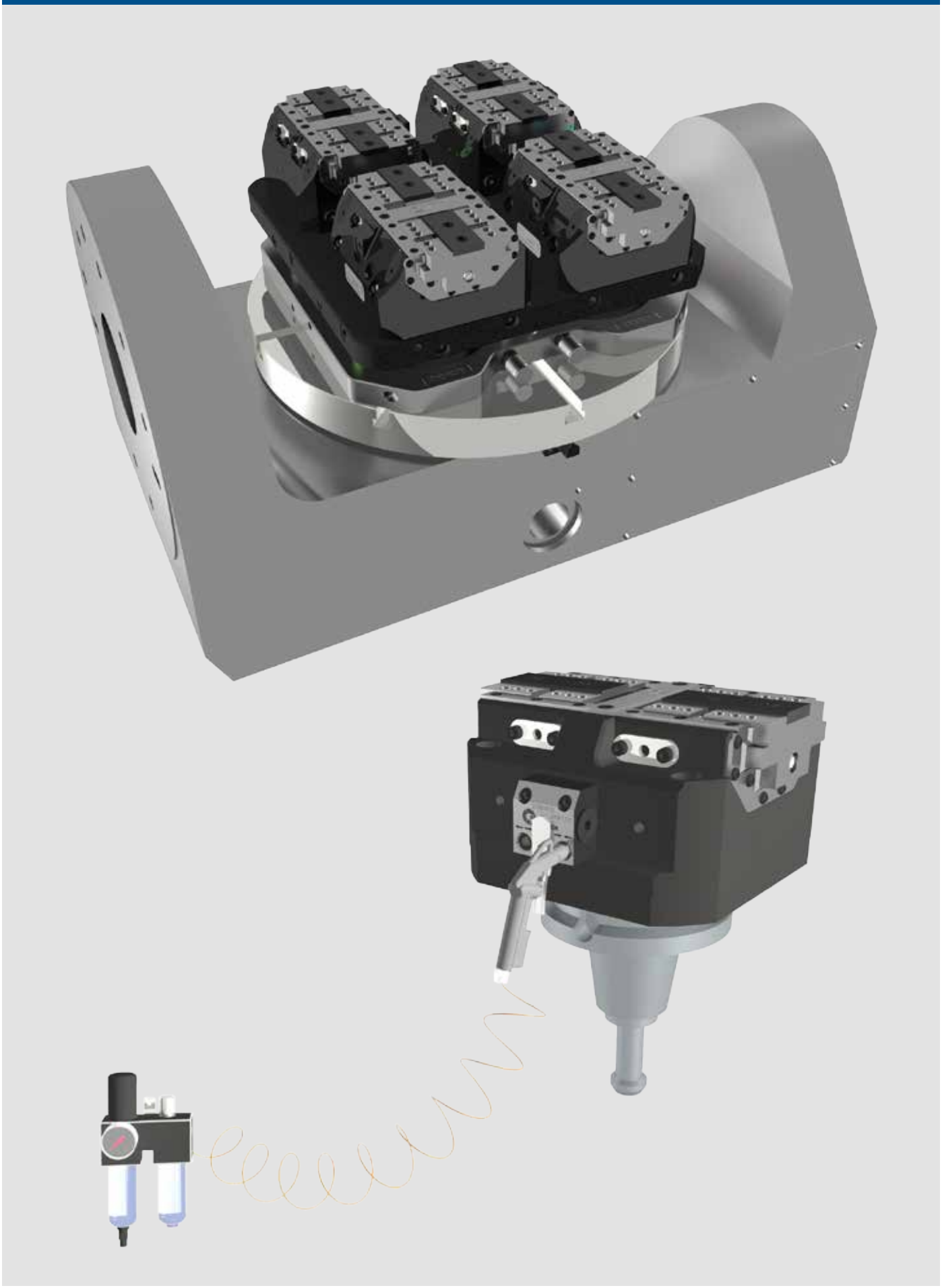

TVP-N
NORMAL STROKE

TVP-L
LONG STROKE

TVP-F
FIXED JAW

Pneumatic twin vice

Application/customer benefits
- Compact design
- Linear pressure adjustment
- Highest repeatability
- Highest rigidity

Technical features
- H7 quality pilot bore
- Housing and functional parts hardened for high precision and long life
- Air purge
- Ready for central grease lubrication
- Master jaws with both Tongue & Groove and fine serration 1.5 mm x 60°
- OD and ID clamping
- Stroke control via proximity switches (optional)

Standard equipment
Self-centering vice without top jaws
All bolts and centering bushings included

Actual gripping force diagrams

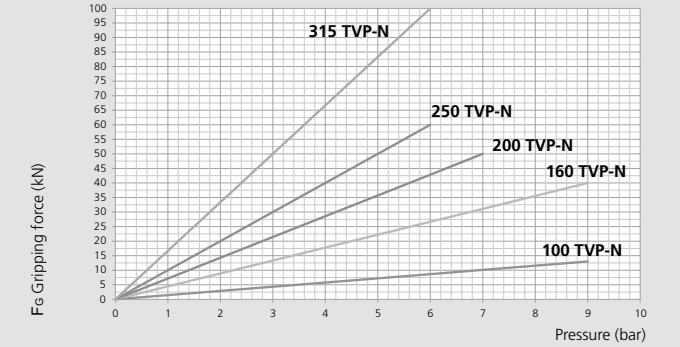

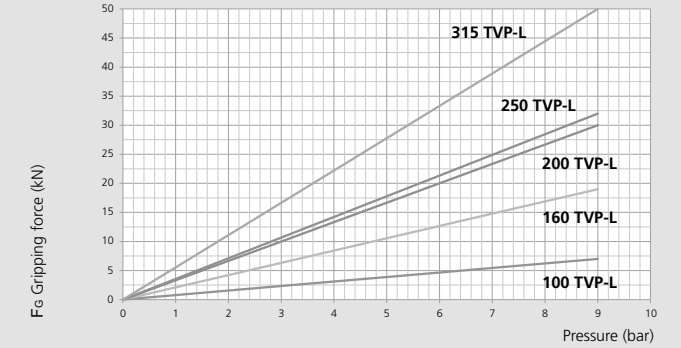

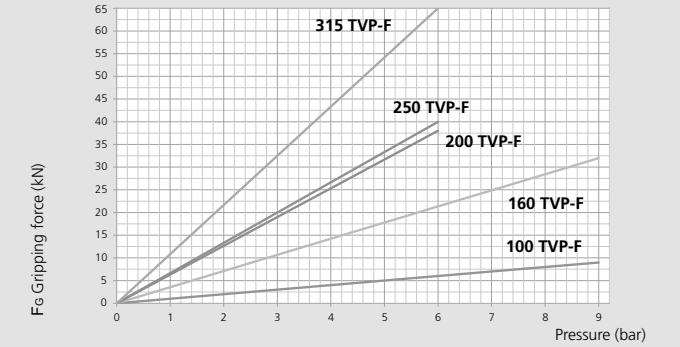

Technical data

Type	Id. No.	Stroke Type	Max. clamping force kN	Stroke / Jaw mm	Max. operating pressure bar	Repeatability mm	Weight kg
100 TVP-N	77903010	Normal	13	2.6	9	0.01	4.3
100 TVP-L	77903110	Long	7	6	9	0.01	4.3
100 TVP-F	77903210	Fixed jaw	9	6	9	0.01	4.3
160 TVP-N	77903016	Normal	40	3	9	0.01	13
160 TVP-L	77903116	Long	19	8.4	9	0.01	13
160 TVP-F	77903216	Fixed jaw	32	8.4	9	0.01	13
200 TVP-N	77903020	Normal	50	4.2	7	0.02	23
200 TVP-L	77903120	Long	30	10.2	9	0.02	23
200 TVP-F	77903220	Fixed jaw	38	10.2	6	0.02	23
250 TVP-N	77903025	Normal	60	5.3	6	0.02	39
250 TVP-L	77903125	Long	32	15	9	0.02	39
250 TVP-F	77903225	Fixed jaw	40	15	6	0.02	39
315 TVP-N	77903031	Normal	100	6.4	6	0.03	84
315 TVP-L	77903131	Long	50	18	9	0.03	84
315 TVP-F	77903231	Fixed jaw	65	18	6	0.03	84

Pneumatic twin vice

TVP-N	TVP-L	TVP-F
NORMAL STROKE	LONG STROKE	FIXED JAW

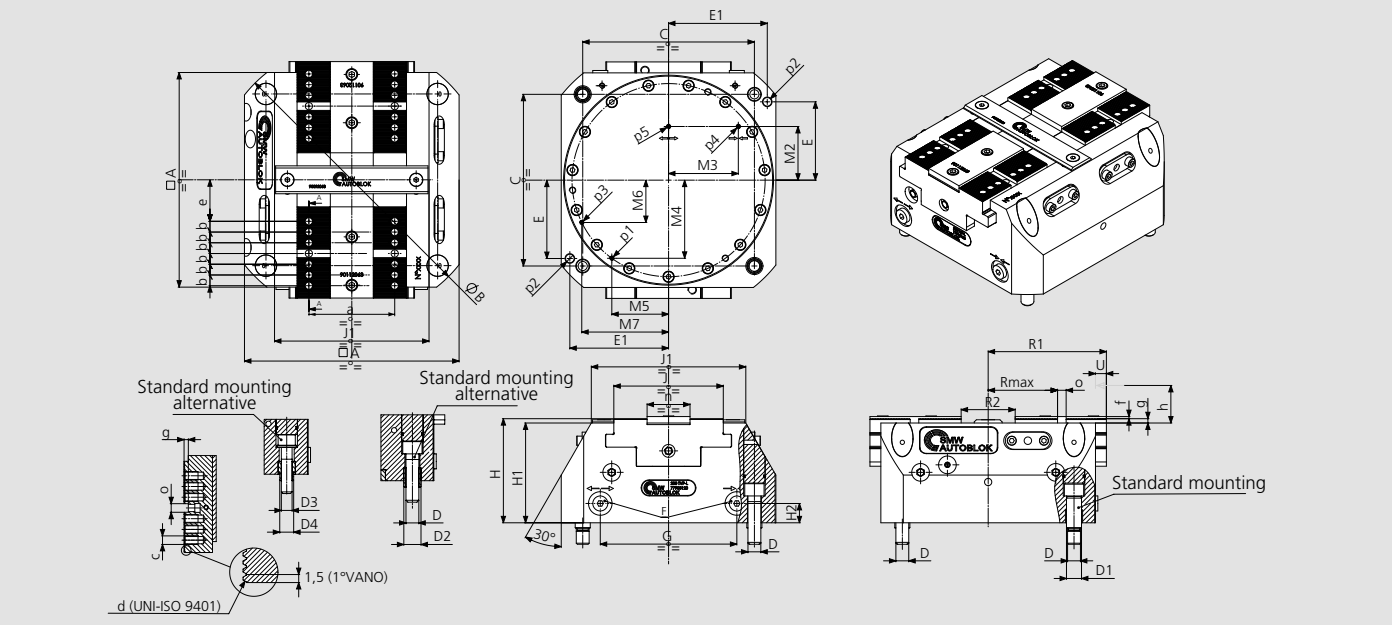

SMW-AUTOBLOK Type			TVP-N | TVP-L TVP-F 100	TVP-N | TVP-L TVP-F 160	TVP-N | TVP-L TVP-F 200	TVP-N | TVP-L TVP-F 250	TVP-N | TVP-L TVP-F 315
	A	mm	100	160	200	250	315
	B(Ø)	mm	132	205	255	314	394
	C	mm	80	125	160	200	250
	D(Ø)	mm	M8x15	M10x18	M12x20	M12x20	M16x23
	D1 (Øf7)	mm	10x4	12x4	14x5	14x5	18x6
	D2 (Øjs7)	mm	11x4	13x6	16x6	16x6	21x6
	D3	mm	-	-	M10x18	-	-
	D4 (Øjs7)	mm	-	-	13x6	-	-
	E	mm	32	53	73	77	105
	E1	mm	45	73	92	115	140
	F	mm	M5	G1/8"	G1/8"	G1/8"	G1/8"
	G	mm	59.3	99	127.3	157	200.8
	H	mm	75.5	89.7	97	105	139
	H1	mm	72	86	93	100	133
	H2	mm	15	18	18	20	25
	J	mm	47	75	102	125	160
	J1	mm	72	108	144	180	230
	M2	mm	32	40	50	64	80
	M3	mm	29.5	50	65	75	90
	M4	mm	34.2	59	72.8	89.8	117.7
	M5	mm	27.7	41	52.9	65.2	79.4
	M6	mm	14.2	30.7	39.5	48.7	57.8
	M7	mm	41.1	62.9	80.9	99.8	129.7
Lubrication	**p1**	mm	M4	M4	M4	M5	M5
	p2 ØH7	mm	6x14	8x14	8x14	10x20	12x20
Air purge	**p3**	mm	M4	M4	M4	M5	M5
Vice closed	**p4**	mm	M4	M4	M4	M5	M5
Vice open	**p5**	mm	M4	M4	M4	M5	M5
min/max (long stroke)	**R2**	mm	20/32	26/42.8	30/50.4	39/69	50/86
min/max (long stroke)	**R1**	mm	50/56	82.5/90.9	100/110.2	119.5/134.5	151.5/169.5
min/max (long stroke)	**Rmax**	mm	25.6/31.6	44.8/53.2	54.5/64.7	51.5/66.5	81.5/99.5
min/max (normal stroke)	**R2**	mm	19.8/25	26/32	30.6/39	34.4/45	49.2/62
min/max (normal stroke)	**R1**	mm	47.4/50	82.5/85.5	95.8/100	119.7/125	151.1/157.5
min/max (normal stroke)	**Rmax**	mm	25.4/28	45/48	54.5/58.7	55.7/61	87.1/93.5
min/max (fixed jaw)	**R2**	mm	20/26	26/34.4	30/40.2	39/54	56/74
min/max (fixed jaw)	**R1**	mm	50/56	82.5/90.9	100/110.2	119.5/134.5	151.5/169.5
min/max (fixed jaw)	**Rmax**	mm	25.6/31.6	44.8/53.2	54.5/64.7	51.5/66.5	81.5/99.5
Long stroke	**U**	mm	6	8.4	10.2	15	18
Normal stroke	**U**	mm	2.6	3	4.2	5.3	6.4
Fixed jaw stroke	**U**	mm	6	8.4	10.2	15	18
	a	mm	35	60	80	90	120
	b	mm	7	10	10	12	15
	c	mm	M6x10	M8x12	M8x12	M10x15	M12x17
Serration	**d**	mm	1.5x60°	1.5x60°	1.5x60°	1.5x60°	1.5x60°
min/max (normal stroke)	**e**	mm	14.4/17	19/22	28.5/32.7	24.7/30	33.1/39.5
min/max (long stroke)	**e**	mm	14.6/20.6	18.8/27.2	28.5/38.7	32.5/47.5	42.5/60.5
min/max (fixed jaw)	**e**	mm	14.6/20.6	18.8/27.2	28.5/38.7	32.5/47.5	42.5/60.5
	f	mm	1.8	1.8	2	2.5	2.5
	g	mm	2.7	3.2	4	4	4
	h	mm	16	25	35	40	40
	o (H7)	mm	6	8	8	10	12
	n (g6)	mm	20	32	40	50	60

TVH-N

NORMAL STROKE

TVH-L

LONG STROKE

Hydraulic twin vice

Application/customer benefits

- Compact design
- Linear pressure adjustment
- Highest repeatability
- Highest rigidity

Technical features

- H7 quality pilot bore
- Housing and functional parts hardened for high precision and long life
- Air purge
- Ready for central grease lubrication
- Master jaws with both Tongue & Groove and fine serration 1.5 mm x 60°
- OD and ID clamping
- Stroke control via proximity switches (optional)

Standard equipment

Self-centering vice without top jaws
All bolts and centering bushings included

Actual gripping force diagrams

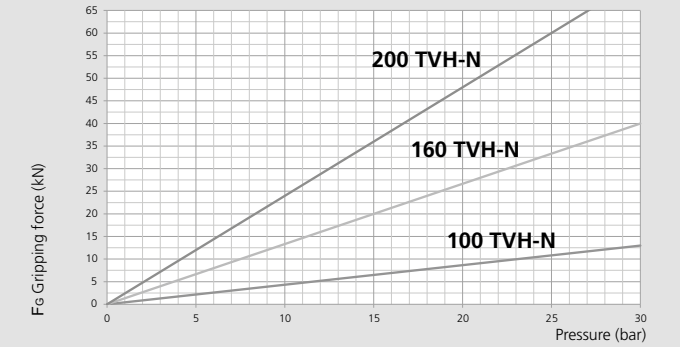

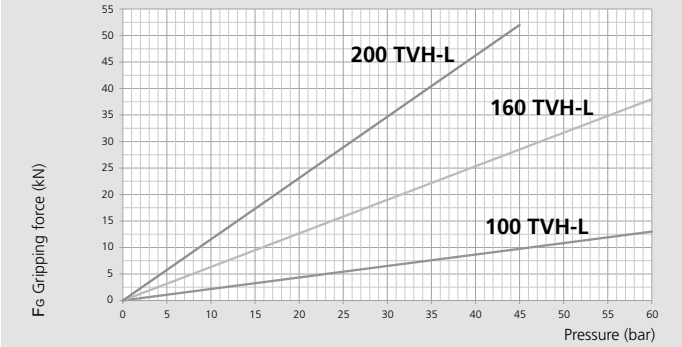

Technical data

Type	Id. No.	Stroke Type	Max. clamping force kN	Stroke / Jaw mm	Max. operating pressure bar	Repeatability mm	Weight kg
100 TVH-N	77903510	Normal	13	2.6	30	0.01	4.5
100 TVH-L	77903610	Long	13	6	60	0.01	4.5
160 TVH-N	77903516	Normal	40	3	30	0.01	14
160 TVH-L	77903616	Long	38	8.4	60	0.01	14
200 TVH-N	77903520	Normal	60	4.2	25	0.02	25
200 TVH-L	77903620	Long	52	10.2	45	0.02	25

Hydraulic twin vice

TVH-N

NORMAL STROKE

TVH-L

LONG STROKE

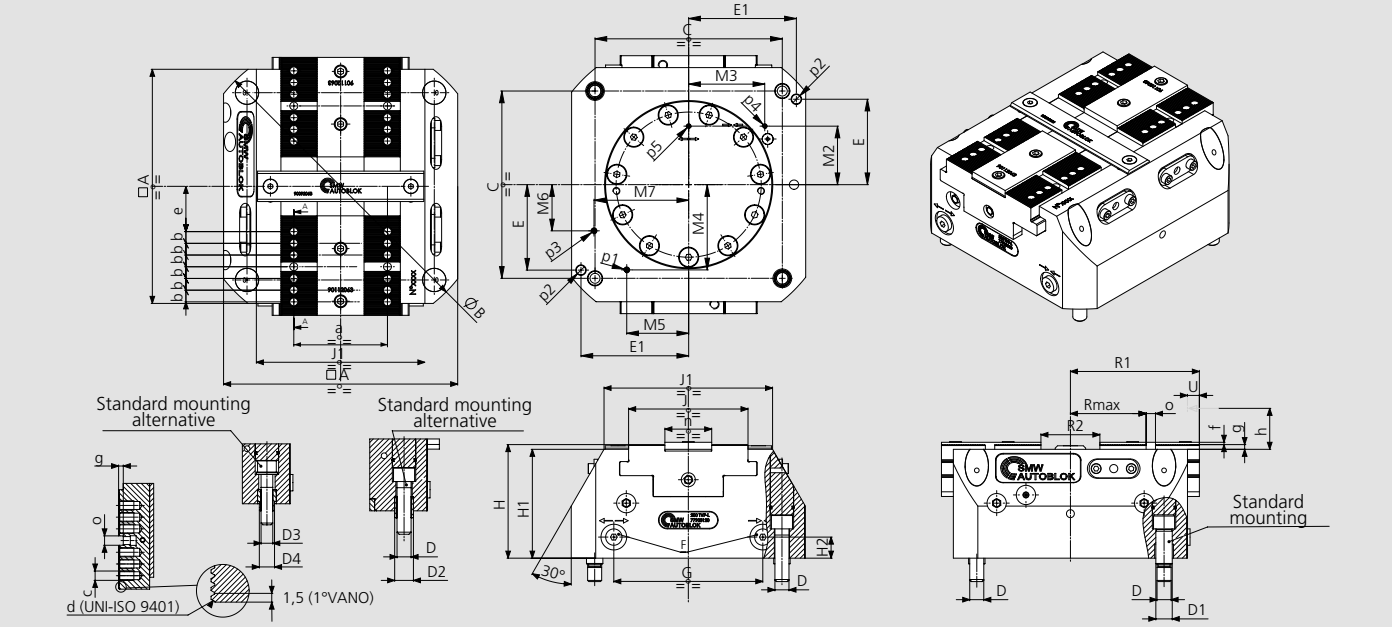

SMW-AUTOBLOK Type			TVH-N I TVH-L 100	TVH-N I TVH-L 160	TVH-N I TVH-L 200
	A	mm	100	160	200
	B(Ø)	mm	132	205	255
	C	mm	80	125	160
	D(Ø)	mm	M8x15	M10x18	M12x20
	D1 (Øf7)	mm	10x4	12x4	14x5
	D2 (Øjs7)	mm	11x4	13x6	16x6
	D3	mm	-	-	M10x18
	D4 (Øjs7)	mm	-	-	13x6
	E	mm	32	53	73
	E1	mm	45	73	92
	F	mm	G1/8"	G1/8"	G1/8"
	G	mm	55	98	128
	H	mm	75.5	89.7	97
	H1	mm	72	86	93
	H2	mm	15	18	18
	J	mm	47	75	102
	J1	mm	72	108	144
	M2	mm	32	40	50
	M3	mm	29.5	50	65
	M4	mm	34.2	59	72.8
	M5	mm	27.7	41	52.9
	M6	mm	14.2	30.7	39.5
	M7	mm	41.1	62.9	80.9
Lubrication	**p1**	mm	M4	M5	M5
	p2 ØH7	mm	6x14	8x14	8x14
Air purge	**p3**	mm	M4	M5	M5
Vice closed	**p4**	mm	M4	M4	M4
Vice open	**p5**	mm	M4	M4	M4
min/max (long stroke)	**R2**	mm	20/32	26/42.8	30/50.4
min/max (long stroke)	**R1**	mm	50/56	82.5/90.9	100/110.2
min/max (long stroke)	**Rmax**	mm	25.6/31.6	44.8/53.2	54.5/64.7
min/max (normal stroke)	**R2**	mm	19.8/25	26/32	30.6/39
min/max (normal stroke)	**R1**	mm	47.4/50	82.5/85.5	95.8/100
min/max (normal stroke)	**Rmax**	mm	25.4/28	45/48	54.5/58.7
Long stroke	**U**	mm	6	8.4	10.2
Normal stroke	**U**	mm	2.6	3	4.2
	a	mm	35	60	80
	b	mm	7	10	10
	c	mm	M6x10	M8x12	M8x12
Serration	**d**	mm	1.5x60°	1.5x60°	1.5x60°
min/max (normal stroke)	**e**	mm	14.4/17	19/22	28.5/32.7
min/max (long stroke)	**e**	mm	14.6/20.6	18.8/27.2	28.5/38.7
	f	mm	1.8	1.8	2
	g	mm	2.7	3.2	4
	h	mm	16	25	35
	o (H7)	mm	6	8	8
	n (g6)	mm	20	32	40

TVP / TVH

Pneumatic and hydraulic twin vices

■ Mounting instruction

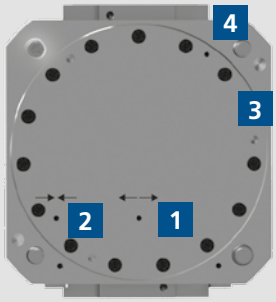

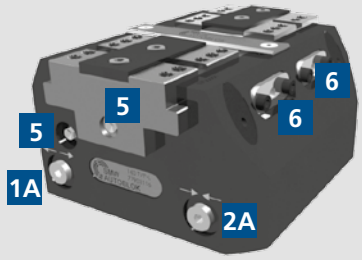

Solution 1 Standard

± 0,03 mm to clamping center

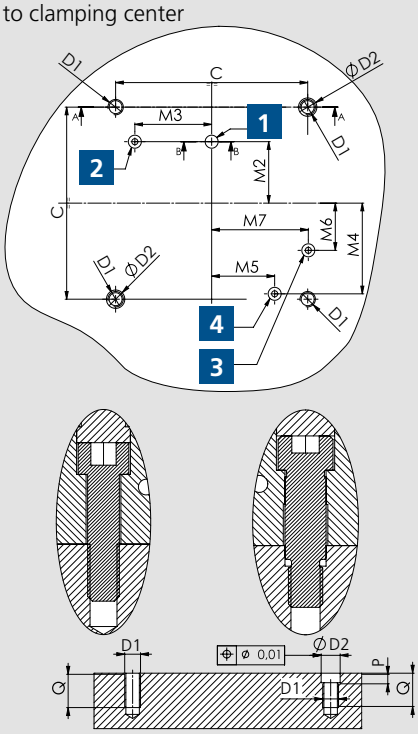

All bolts and centering bushings included

Solution 2 Standard

± 0,025 mm to clamping center

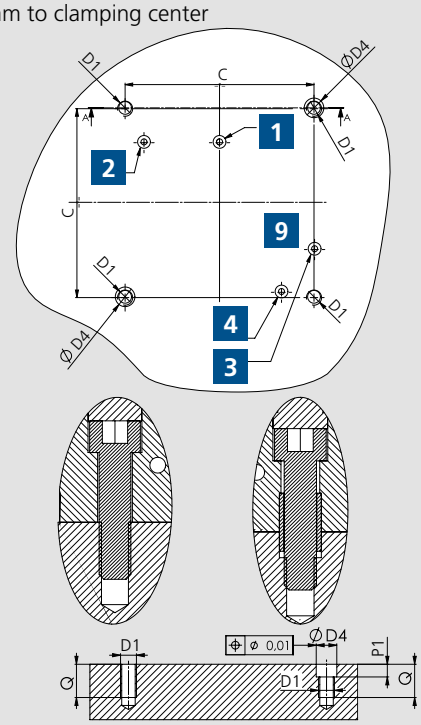

All bolts and centering bushings included

Feeding seats

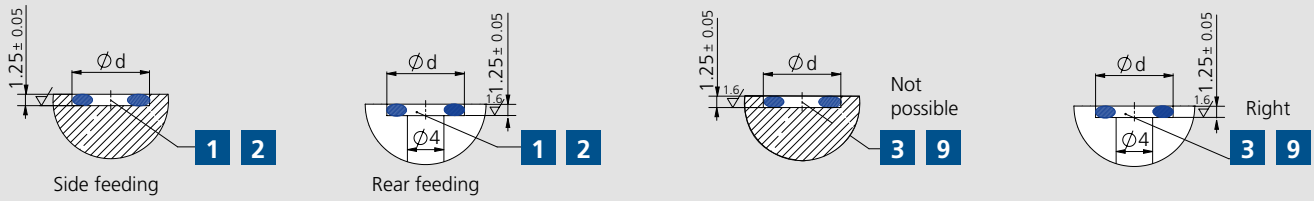

Functional Overview

1	Open-Rear feeding	2	Closed-Rear feeding	3	Air purge	5	Lubrication fitting
1A	Open-Side feeding	2A	Closed-Side Feeding	4	Central lubrication	6	Proximity switches seats

Type	C	D1	D2H7	D4H7	M	M1	M2	M3	M4	M5	M6	M7	P	P1	Q	V	Z	Ød	OR
TV 100	80	M8	10	11	45	29	32	29.5	34.2	27.7	14.2	41.1	6	6	18	37.3	96.5	8	OR2018
TV 160	125	M10	12	13	69	48	40	50	59	41	30.7	62.9	6	7	21	50	155	8	OR2018
TV 200	160	M12	14	16	88	62	50	65	72.8	52.9	39,5	80.9	7	7	24	62	195	8.8	OR2021
TV 250	200	M12	14	16	113	77	64	75	89.8	65.2	48.6	99.8	7	7	24	80	239	8.8	OR2021
TV 315	250	M15	18	21	-	-	80	90	115.7	84	62.7	128.5	8	7	27	-	-	8.8	OR2021

Notes

PTP-N

NORMAL STROKE

PTP-L

LONG STROKE

PTP-F

FIXED JAW

Protected pneumatic twin vice

- Pneumatic version
- Pneumatic jaw stroke control valve

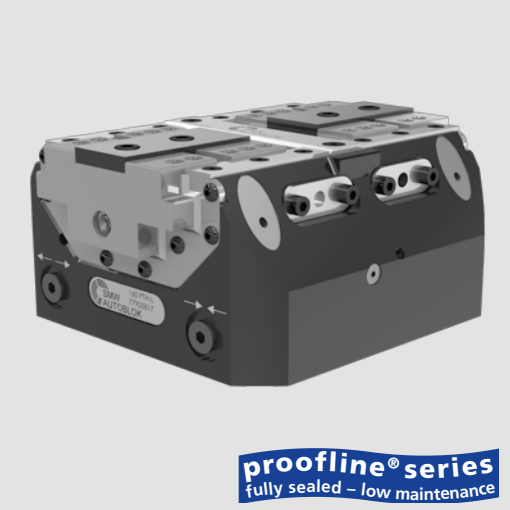

Application/customer benefits

- Protected against contamination of swarf and chips, fully sealed (proofline)
- Compact design
- Highest repeatability
- Highest rigidity
- Linear pressure adjustment

Technical features

- Housing and functional parts hardened for high precision and long life
- Air purge
- Ready for central grease lubrication
- Master jaws with both Tongue & Groove and fine serration 1.5 mm x 60°
- OD and ID clamping
- Pneumatic jaw stroke control valve (optional)
- Air sensing
- Stroke control via proximity switches on all types and sizes except 100 PTP-F (optional)
- For 100 PTP-F only one stroke control via proximity switch for vice closed (optional)

Standard equipment

Self-centering vice without top jaws
All bolts and centering bushings included

Actual gripping force diagrams

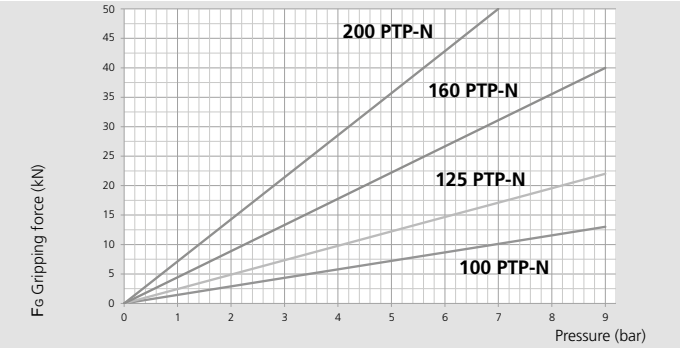

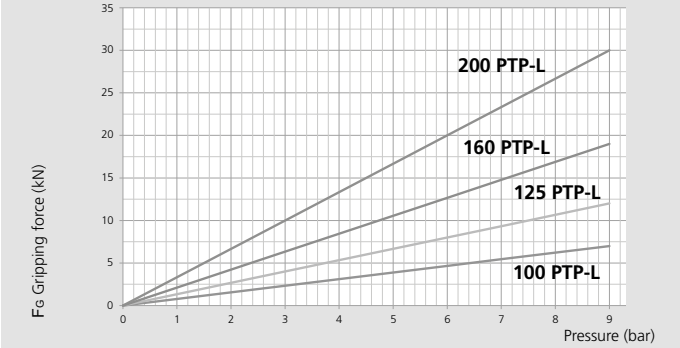

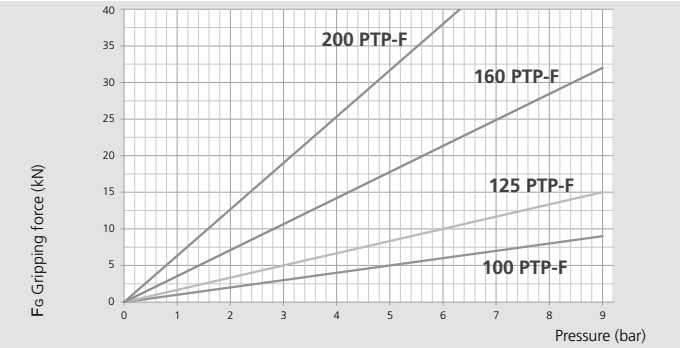

Technical data

Type	Id. No.	Stroke Type	Clamping force max. kN	Stroke / Jaw mm	Piston area cm²	Operating pressure max. bar	Repeatability mm	Weight kg
100 PTP-N	77905211	Normal	13	2.6	45	9	0.01	5.5
100 PTP-L	77905311	Long	7	6	45	9	0.01	5.5
100 PTP-F	77905411	Fixed jaw	9	6	45	9	0.01	5.5
125 PTP-N	77905212	Normal	22	2.6	78	9	0.01	7
125 PTP-L	77905312	Long	12	6	78	9	0.01	7
125 PTP-F	77905412	Fixed jaw	15	6	78	9	0.01	7
160 PTP-N	77905217	Normal	40	3	128	9	0.01	13
160 PTP-L	77905317	Long	19	8.4	128	9	0.01	13
160 PTP-F	77905417	Fixed jaw	32	8.4	128	9	0.01	13
200 PTP-N	77905221	Normal	50	4.2	194	7	0.02	23
200 PTP-L	77905321	Long	30	10.2	194	9	0.02	23
200 PTP-F	77905421	Fixed jaw	38	10.2	194	6	0.02	23

Protected pneumatic twin vice

- Pneumatic version
- Pneumatic jaw stroke control valve

PTP-N
NORMAL STROKE

PTP-L
LONG STROKE

PTP-F
FIXED JAW

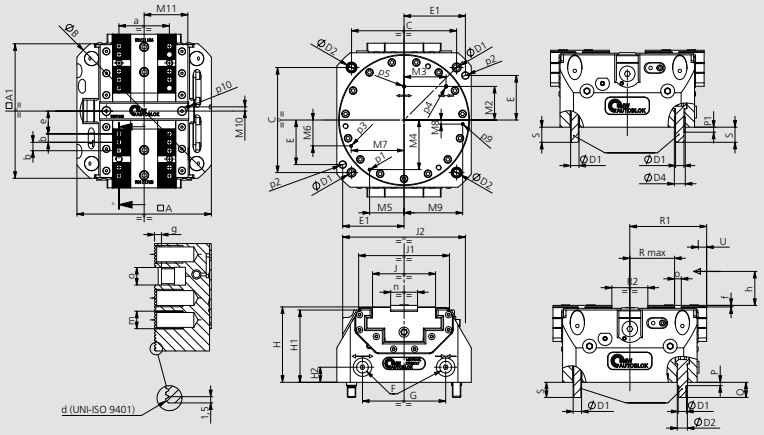

SMW-AUTOBLOK Type			PTP-N | PTP-L PTP-F 100	PTP-N | PTP-L PTP-F 125	PTP-N | PTP-L PTP-F 160	PTP-N | PTP-L PTP-F 200
	A	mm	100	125	160	200
	A1	mm	110	125	160	200
	B(Ø)	mm	136	162	205	255
	C	mm	80	100	125	160
	D1(Ø)	mm	M8	M8	M10	M12
	D2 (Øf7)	mm	10	10	12	14
	D4 (Øjs7)	mm	11	11	13	16
	E	mm	32	/	53	73
	E1	mm	45	/	73	92
	F	mm	M5	M5	G1/8"	G1/8"
	G	mm	59	59	99	127
	H	mm	75.5	80.5	89,7	97
	H1	mm	72	77	86	93
	H2	mm	15	17	18	18
	J	mm	47	47	75	94
	J1	mm	82	100	108	144
	J2	mm	100	121	146	166
	M2	mm	32	32	40	50
	M3	mm	29.5	29.5	50	65
	M4	mm	34,2	40.5	59	72.8
	M5	mm	27.7	38.5	41	52.9
	M6	mm	14,2	10.6	30.7	39.5
	M7	mm	41.1	54.5	62.9	80.9
	M8	mm	8.3	4.8	4.9	9.4
	M9	mm	42.7	55.3	69.8	89.5
	M10	mm	5	5	5	8
	M11	mm	34	34	52	60
	P	mm	4	4	4	5
	P1	mm	4	4	6	6
	Q	mm	15	15	18	20
min/max (long stroke)	**R max**	mm	25.6/31.6	25.6/31.6	44.8/53.2	54.5/64.7
min/max (normal stroke)	**R max**	mm	25.4/28	25.4/28	45/48	54.5/58.7
min/max (fixed jaw)	**R max**	mm	25.6/31.6	25.6/31.6	44.8/53.2	54.5/64.7
min/max (long stroke)	**R1**	mm	57.5/63.5	64.5/70.5	82.5/90.9	102.5/112.7
min/max (normal stroke)	**R1**	mm	57.4/60	64.4/67	82.5/85.5	102.8/107
min/max (fixed jaw)	**R1**	mm	57.5/63.5	64.5/70.5	82.5/90.9	102.5/112.7
min/max (long stroke)	**R2**	mm	20/32	20/32	26/42.8	30/50.4
min/max (normal stroke)	**R2**	mm	19.8/25	19.8/25	26/32	30.6/39
min/max (fixed jaw)	**R2**	mm	20/26	20/26	26/34.4	30/40.2
	S	mm	15	15	18	20
Long stroke	**U**	mm	6	6	8.4	10.2
Normal stroke	**U**	mm	2.6	2.6	3	4.2
Fixed jaw	**U**	mm	6	6	8.4	10.2
	a	mm	35	35	60	80
	b	mm	7	7	10	10
Serration	**d**	mm	1,5x60°	1,5x60°	1,5x60°	1,5x60°
min/max (long stroke) (fixed jaw)	**e**	mm	14.6/20.6	14.6/20.6	18.8/27.2	28.5/38.7
min/max (normal stroke)	**e**	mm	14.4/17	14.4/17	19/22	28.5/32.7
	f	mm	1.8	1.8	1.8	2
	g	mm	2.7	2.7	3.2	4
	h	mm	16	16	25	35
	m	mm	M6x10	M6x10	M8x12	M8x12
	n (g6)	mm	20	20	32	40
	o (H7)	mm	6	6	8	8
Lubrication fitting	**p1**	mm	M4	M4	M4	M4
	p2 (øH7)	mm	/	/	8x14	8x14
Air stroke control or Air purge	**p3**	mm	M4	M4	M4	M4
Vice Closed	**p4**	mm	M4	M4	M4	M4
Vice Open	**p5**	mm	M4	M4	M4	M4
Air sensing connection	**p9**	mm	M4	M4	M4	M4
Air sensing outlet (under front plate)	**p10**	mm	M4	M4	M4	M4

PTH-N

NORMAL STROKE

PTH-L

LONG STROKE

Protected hydraulic twin vice

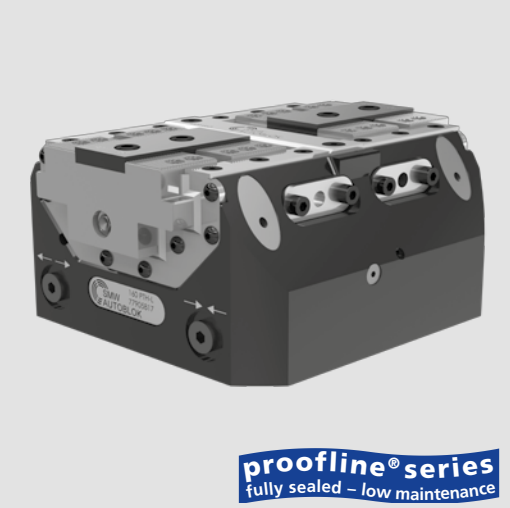

Application/customer benefits

- Protected against contamination of swarf and chips, fully sealed (proofline)
- Compact design
- Highest repeatability
- Highest rigidity
- Linear pressure adjustment

Technical features

- Housing and functional parts hardened for high precision and long life
- Air purge
- Ready for central grease lubrication
- Master jaws with both Tongue & Groove and fine serration 1.5 mm x 60°
- OD and ID clamping
- Pneumatic jaw stroke control valve (optional)
- Air sensing
- Stroke control via proximity switches (optional)

Standard equipment

Self-centering vice without top jaws
All bolts and centering bushings included

Actual gripping force diagrams

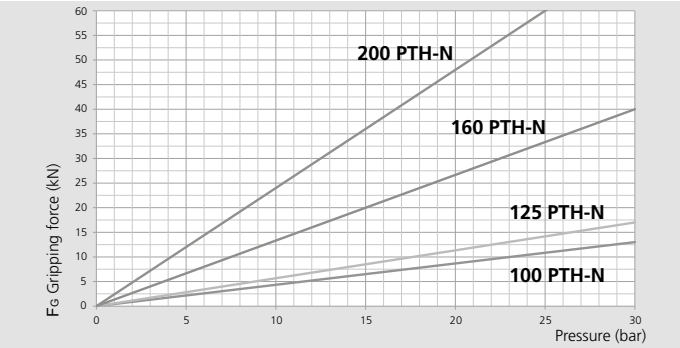

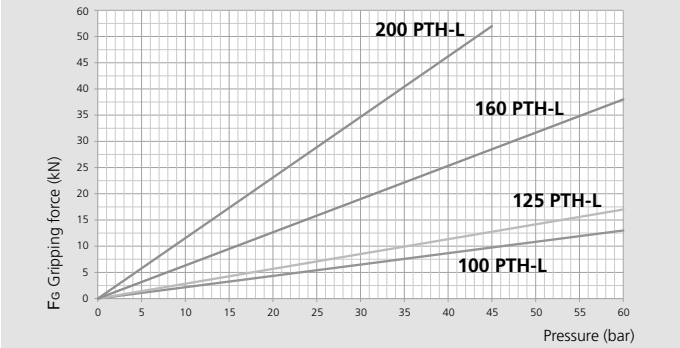

Technical data

Type	Id. No.	Stroke Type	Clamping force max. kN	Stroke / Jaw mm	Piston area cm²	Operating pressure max. bar	Repeatability mm	Weight kg
100 PTH-N	77905711	Normal	13	2.6	15	30	0.01	6
100 PTH-L	77905811	Long	13	6	15	60	0.01	6
125 PTH-N	77905712	Normal	17	2.6	20	30	0.01	8
125 PTH-L	77905812	Long	17	6	20	60	0.01	8
160 PTH-N	77905717	Normal	40	3	45	30	0.01	15
160 PTH-L	77905817	Long	38	8.4	45	60	0.01	15
200 PTH-N	77905721	Normal	60	4.2	68	25	0.02	25
200 PTH-L	77905821	Long	52	10.2	68	45	0.02	25

Protected hydraulic twin vice

PTH-N
NORMAL STROKE

PTH-L
LONG STROKE

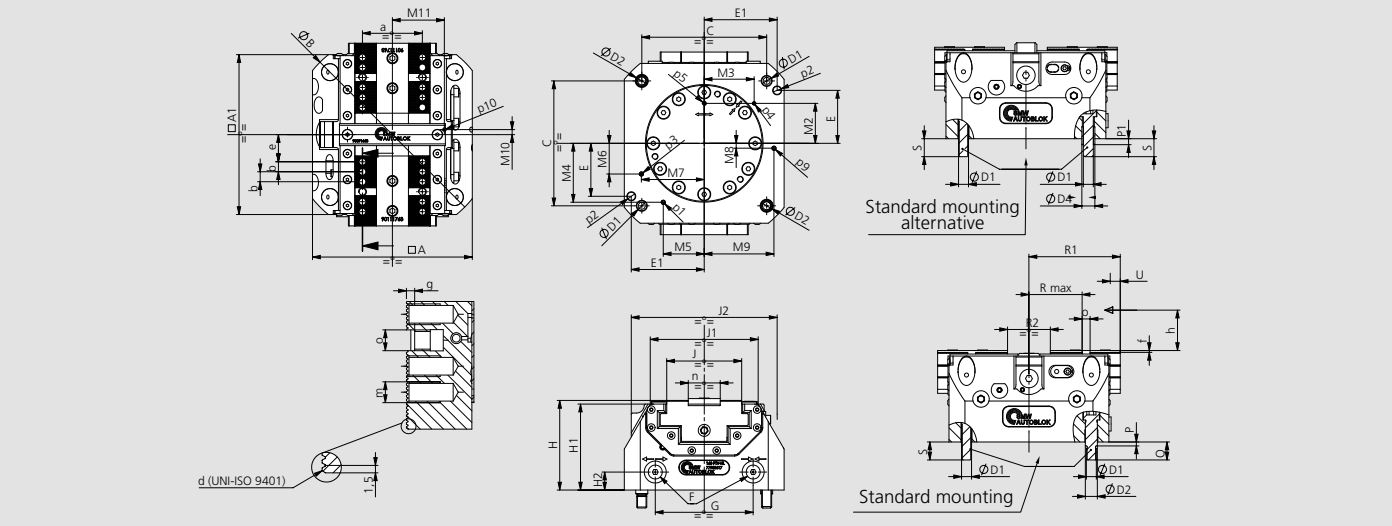

SMW-AUTOBLOK Type			PTH-N | PTH-L 100	PTH-N | PTH-L 125	PTH-N | PTH-L 160	PTH-N | PTH-L 200
	A	mm	100	125	160	200
	A1	mm	110	125	160	200
	B(Ø)	mm	136	162	205	255
	C	mm	80	100	125	160
	D1(Ø)	mm	M8	M8	M10	M12
	D2 (Øf7)	mm	10	10	12	14
	D4 (Øjs7)	mm	11	11	13	16
	E	mm	32	/	53	73
	E1	mm	45	/	73	92
	F	mm	G1/8″	G1/8″	G1/8″	G1/8″
	G	mm	55	55	98	128
	H	mm	75.5	80.5	89.7	97
	H1	mm	72	77	86	93
	H2	mm	15	17	18	18
	J	mm	47	47	75	94
	J1	mm	82	100	108	144
	J2	mm	100	121	146	166
	M2	mm	32	32	40	50
	M3	mm	29.5	29.5	50	65
	M4	mm	34.2	40.5	59	72.8
	M5	mm	27.7	38.5	41	52.9
	M6	mm	14.2	10.6	30.7	39.5
	M7	mm	41.1	54.5	62.9	80.9
	M8	mm	8.3	4.8	4.9	9.4
	M9	mm	42.7	55.3	69.8	89.5
	M10	mm	5	5	5	8
	M11	mm	34	34	52	60
	P	mm	4	4	4	5
	P1	mm	4	4	6	6
	Q	mm	15	15	18	20
min/max (long stroke)	**R max**	mm	25.6/31.6	25.6/31.6	44.8/53.2	54.5/64.7
min/max (normal stroke)	**R max**	mm	25.4/28	25.4/28	45/48	54.5/58.7
min/max (long stroke)	**R1**	mm	57.5/63.5	64.5/70.5	82.5/90.9	102.5/112.7
min/max (normal stroke)	**R1**	mm	57.4/60	64.4/67	82.5/85.5	102.8/107
min/max (long stroke)	**R2**	mm	20/32	20/32	26/42.8	30/50.4
min/max (normal stroke)	**R2**	mm	19.8/25	19.8/25	26/32	30.6/39
	S	mm	15	15	18	20
Long stroke	**U**	mm	6	6	8.4	10.2
Normal stroke	**U**	mm	2.6	2.6	3	4.2
	a	mm	35	35	60	80
	b	mm	7	7	10	10
Serration	**d**	mm	1.5x60°	1.5x60°	1.5x60°	1.5x60°
min/max (long stroke)	**e**	mm	14.6/20.6	14.6/20.6	18.8/27.2	28.5/38.7
min/max (normal stroke)	**e**	mm	14.4/17	14.4/17	19/22	28.5/32.7
	f	mm	1.8	1.8	1.8	2
	g	mm	2.7	2.7	3.2	4
	h	mm	16	16	25	35
	m	mm	M6 x 10	M6 x 10	M8 x 12	M8x12
	n (g6)	mm	20	20	32	40
	o (H7)	mm	6	6	8	8
Lubrication fitting	**p1**	mm	M4	M4	M5	M5
	p2 (øH7)	mm	/	/	8x14	8x14
Air stroke control or Air purge	**p3**	mm	M4	M4	M5	M5
Vice Closed	**p4**	mm	M4	M4	M4	M4
Vice Open	**p5**	mm	M4	M4	M4	M4
Air sensing connection	**p9**	mm	M4	M4	M5	M5
Air sensing outlet (under front plate)	**p10**	mm	M4	M4	M4	M4

PTP / PTH

Protected pneumatic and hydraulic twin vices

■ Mounting instruction

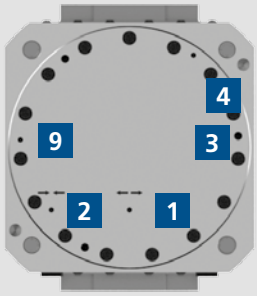

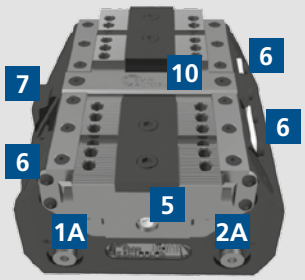

Solution 1 Standard

± 0,03 mm to clamping center

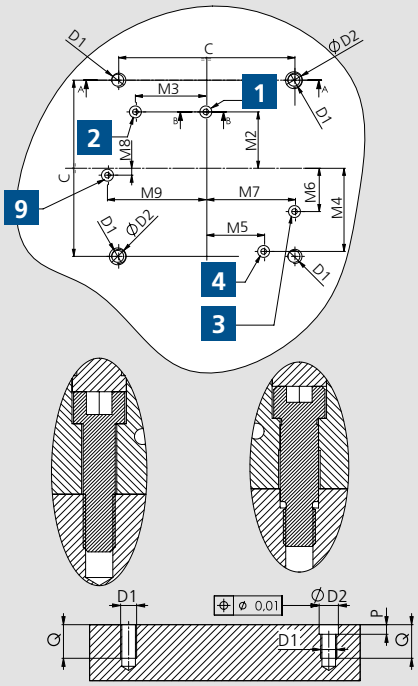

All bolts and centering bushings included

Solution 2 Standard

± 0,025 mm to clamping center

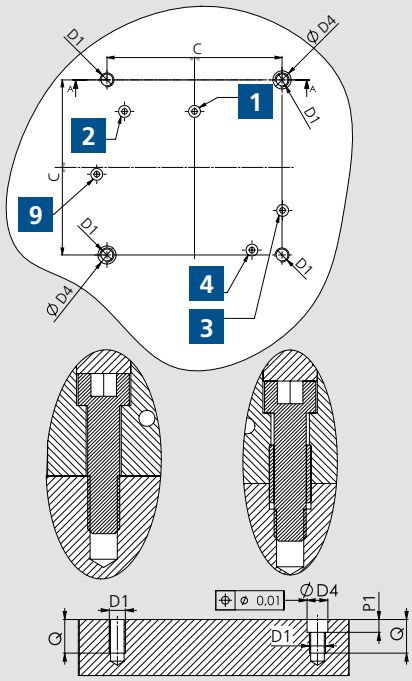

All bolts and centering bushings included

Feeding seats

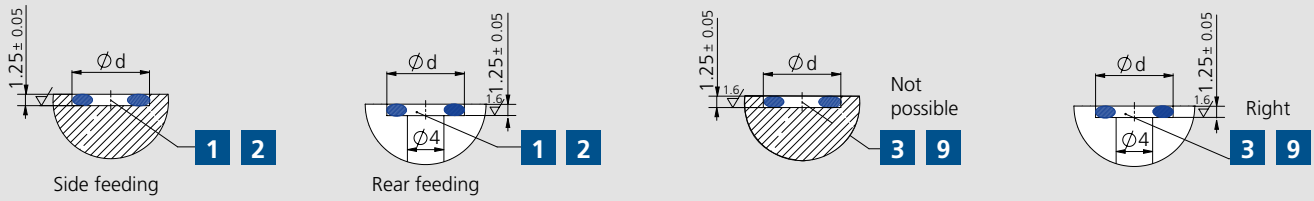

Functional Overview

1	Open-Rear feeding	1A	Open-Side feeding	5	Lubrication fitting	9	Air sensing connection (only bottom)
2	Closed-Rear feeding	2A	Closed-Side Feeding	6	Proximity switch seats	10	Air sensing outlet (under front plate)
3	Pneumatic stroke control or air purge*	4	Central lubrication	7	Pneumatic jaw stroke control valve		

* The air purge can be used only without the valve.

Type	C	D1	D2 H7	D4 H7	M2	M3	M4	M5	M6	M7	M8	M9	P	P1	Q	Ød	OR
PT 100	80	M8	10	11	32	29.5	34.2	27.7	14.2	41.1	7	43	6	6	18	8	OR2018
PT 125	100	M8	10	11	32	29.5	40.5	38.5	9.6	54.6	4.8	55.3	6	6	18	8	OR2018
PT 160	125	M10	12	13	40	50	59	41	30.7	62.9	4.9	69.8	6	7	21	8	OR2018
PT 200	160	M12	14	16	50	65	72.8	52.9	39.5	80.9	9.4	89.5	7	7	24	8,8	OR2021

Application Example

Soft blank top jaws, tongue & groove

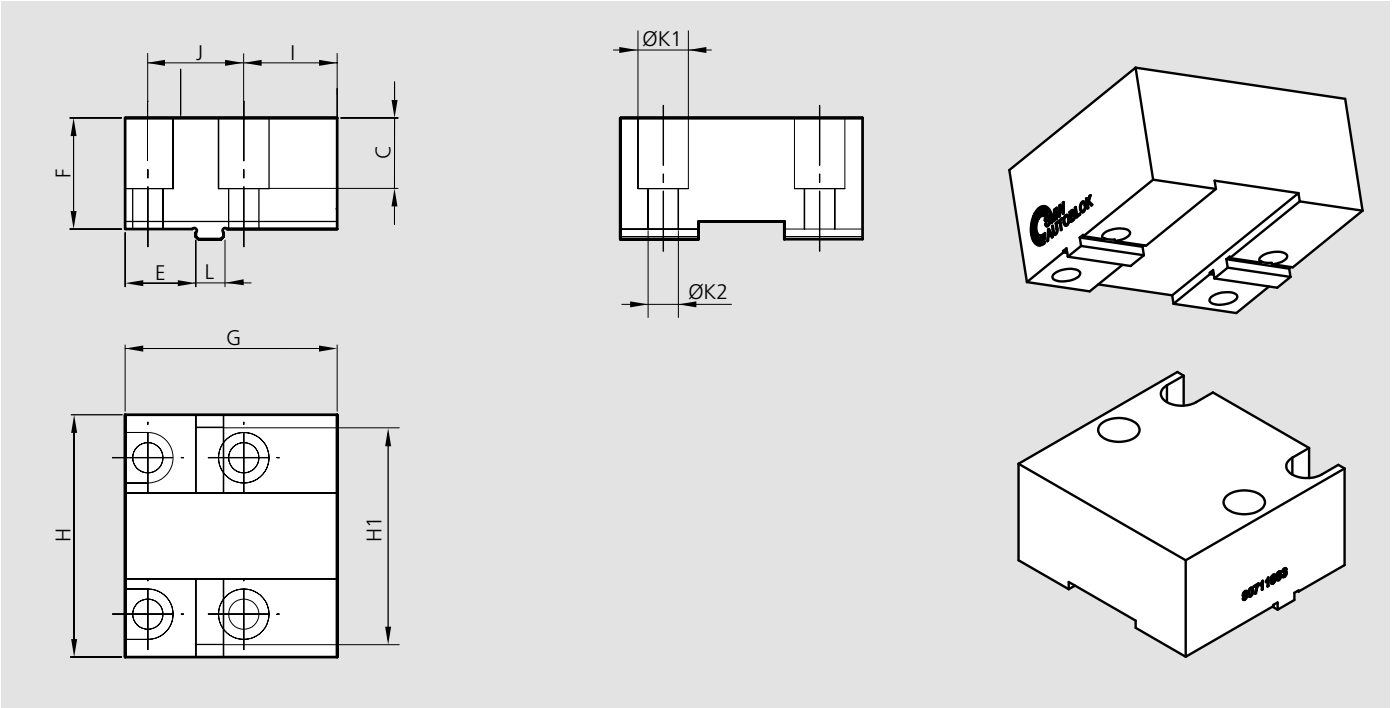

Type	Id. No.	C mm	E mm	F mm	G mm	H mm	H1 mm	I mm	J mm	K1 mm	K2 mm	L mm	Clamping range
100 TV / PT	90711063	20	18	27.5	49	54.5	45	21	21	11	7	6h7	0-70
125 STV-2 / PT	90711283	20	33	27.5	64	54.5	45	21	35	11	7	6h7	0-100
100 TV / PT / SL	90721063	40	18	47.5	49	54.5	45	21	21	11	7	6h7	0-70
125 STV-2 / PT	90721283	40	33	47.5	64	54.5	45	21	35	11	7	6h7	0-100
160 TV / PT / SL	90711663	27	27	37	79	79	74	38	30	14	9	8h7	0-120
180 STV-2 / PT	90711883	27	41	37	93	79	74	38	40	14	9	8h7	0-140
160 TV / PT / SL	90721663	66.5	27	76.5	79	79	74	38	30	14	9	8h7	0-120
180 STV-2 / PT	90721883	66.5	41	76.5	93	79	74	38	40	14	9	8h7	0-140
200 TV / PT / SL	90712063	37	37	47	98.5	109	92	47.5	40	14	9	8h7	0-150
200 TV / PT / SL	90722063	76.5	37	86.5	98.5	109	92	47.5	40	14	9	8h7	0-150
225 STV-2	90712283	37	52	47	113.5	109	92	47.5	50	14	9	8h7	0-180
225 STV-2	90722283	76.5	52	86.5	113.5	109	92	47.5	50	14	9	8h7	0-180
250 TV	90712563	31	59	47	120	124		44	48	18	11	10h7	0-170
250 TV	90722563	81.5	59	97.5	120	124		44	48	18	11	10h7	0-170
315 TV	90713163	42	54	57	150	160		75	60	20	13.5	12h7	on request
315 TV	90723163	87.5	54	102.5	150	160		75	60	20	13.5	12h7	on request

Consisting of 1 piece of jaw

Soft blank top jaws, tongue & groove, for STV-3

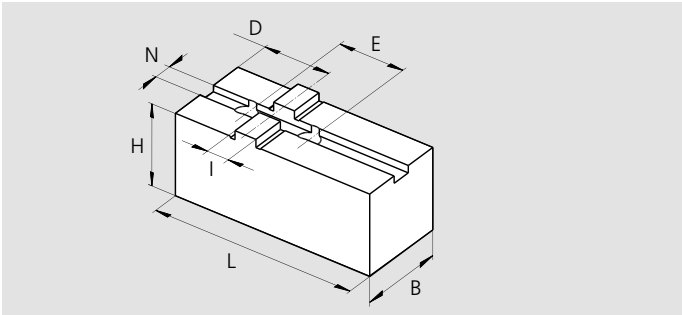

Type	Id. No.	B mm	H mm	L mm	N mm	D mm	E mm	I mm
180 STV-3	12041660	30	32	80	7.94	30	38.1	12.68
225 STV-3	12042060	35	37	100	7.94	35	44.4	12.68

Consisting of 1 piece of jaw

Soft blank top jaws, fine serration 1.5 mm x 60°

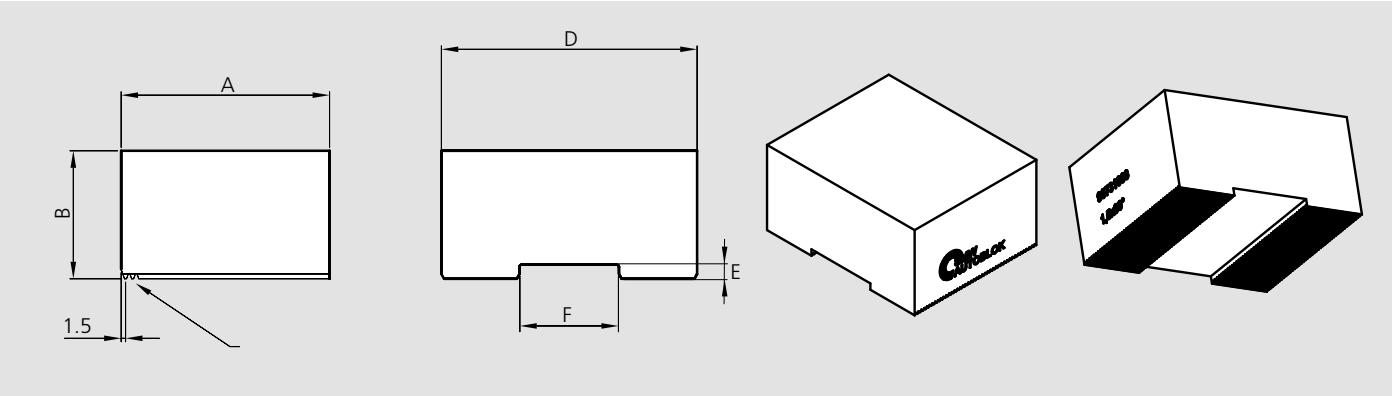

Type	Id. No.	A mm	B mm	D mm	E mm	F mm
100-125 STV / TV / PT / SL	90731063	42	29.5	54.5	2.5	20H8
100-125 STV / TV / PT / SL	90741063	47	49.5	54.5	2.5	20H8
160-180 STV / TV / PT / SL	90731663	66	39.5	79	3	32H8
160-180 STV / TV / PT / SL	90741663	76	79	79	3	32H8
200-225 STV / TV / PT / SL	90732063	87	49.5	109	4	40H8
200-225 STV / TV / PT / SL	90742063	87	89	109	4	40H8
250 TV	90732563	108	49.5	124	4	50H8
250 TV	90742563	108	99	124	4	50H8
315 TV	90733163	160	49.5	160	4	60H8
315 TV	90743163	160	105	160	4	60H8

Consisting of 1 piece of jaw

Soft blank top jaws, narrow, fine serration 1.5 mm x 60°

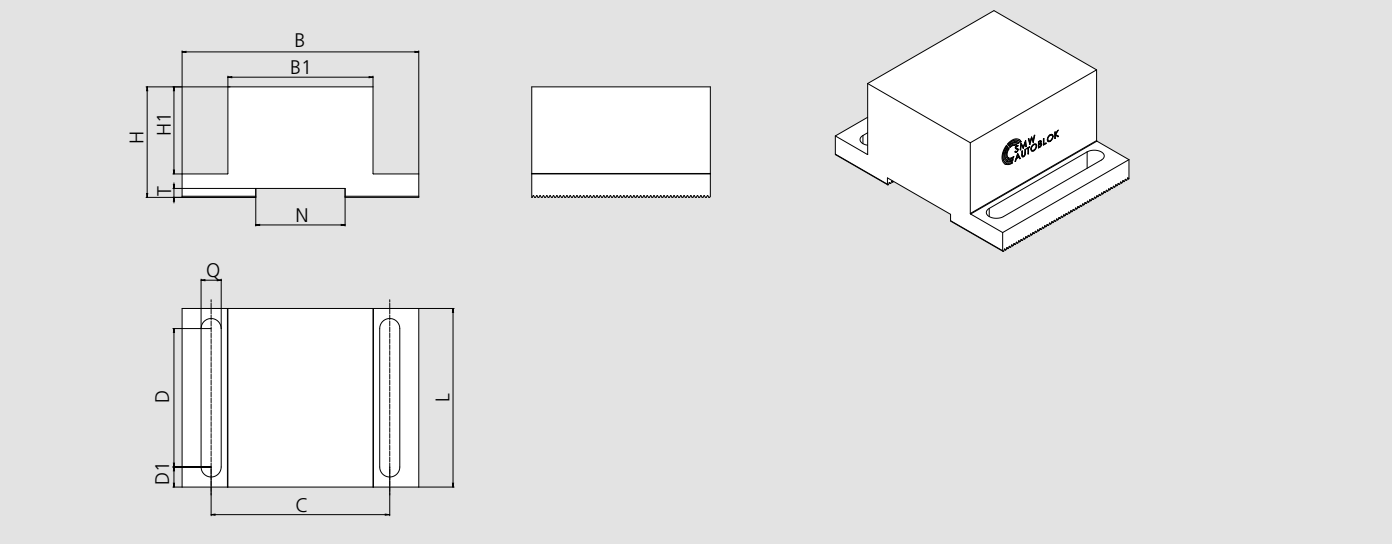

Type	Id. No.	B mm	B1 mm	C mm	D mm	D1 mm	H mm	H1 mm	L mm	N mm	Q mm	T mm
100-125 STV / TV / PT / SL	90751063	54.5	24	35	30	6	29.5	21.5	42	20H8	6.6	2.5
160-180 STV / TV / PT / SL	90751663	79	45	60	42	9	39.5	29	60	32H8	9	3
200-225 STV / TV / PT / SL	90752063	109	65	80	62	9	49.5	39	80	40H8	9	4
250 TV	90752563	124	72	90	62	14	49.5	33	90	50H8	11	4
315 TV	90753163	160	90	120	82	12	49.5	31.5	106	60H8	13.5	4

Consisting of 1 piece of jaw

SinterGrip jaws

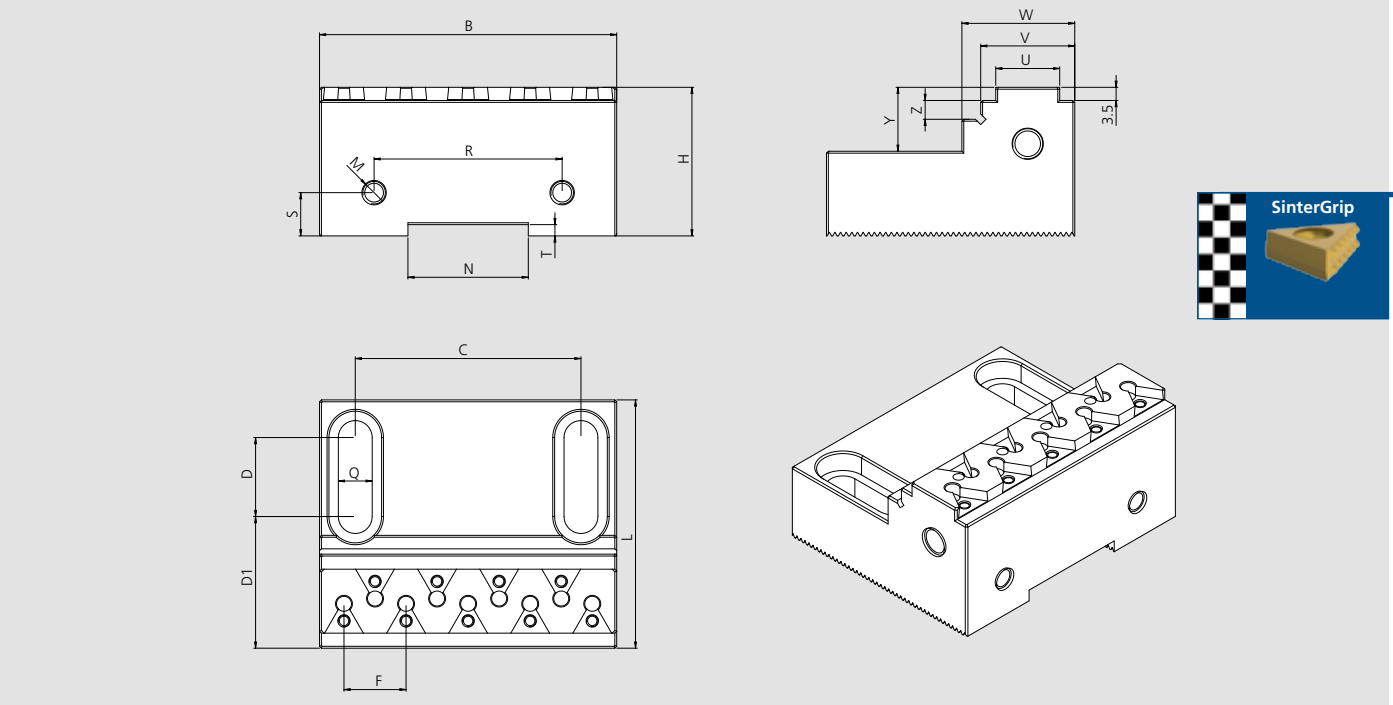

Type	Id. No.	B mm	C mm	D mm	D1 mm	F mm	H mm	L mm	M mm	N mm	Q mm	R mm	S mm	T mm	U mm	V mm	W mm	Y mm	Z mm	Inserts mm
100-125 (S)TV / PT / SL	58454119	54.5	35	7.4	28.3	16.5	29.5	42	M6	20 H8	6.6	35	11.5	2.5	14	22	27	17	5	5
160-180 (S)TV / PT / SL	58454129	79	60	21	35	16.5	39.5	66	M6	32 H8	9	50	11.5	3	17	25	30	17	5	9
200-225 (S)TV / PT / SL	58454139	109	80	21	39.5	18	49.5	87	M6	40 H8	9	70	11.5	4	17	25	30	27.5	7	11
250 TV	58454149	124	90	41	49.5	18	49.5	90	M6	50 H8	9	70	11.5	4	25	33	38	27.5	7	14
315 TV	58454159	160	120	66.5	66.75	18	49.5	160	M6	60 H8	13.5	70	11.5	4	30	38	43	27.5	7	16

SinterGrip jaws narrow

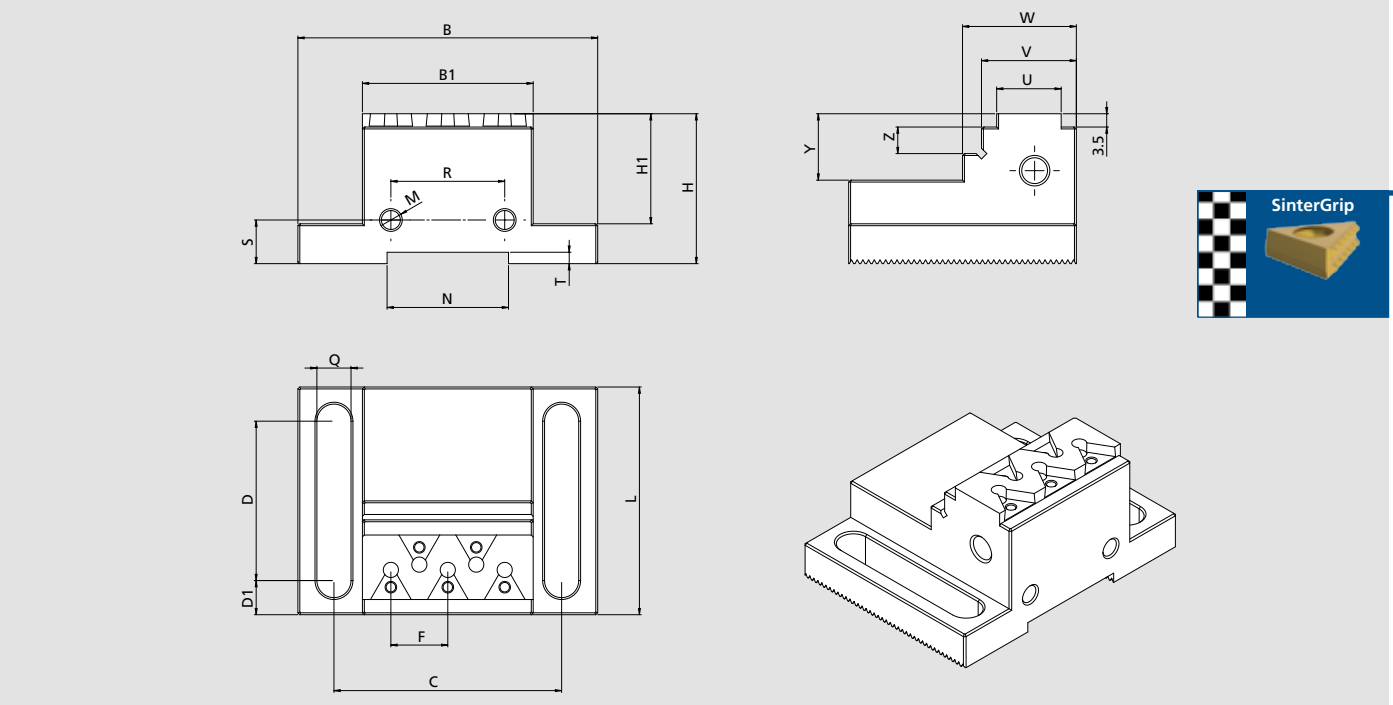

Type	Id. No.	B mm	B1 mm	C mm	D mm	D1 mm	F mm	H mm	H1 mm	L mm	M mm	N mm	Q mm	R mm	S mm	T mm	U mm	V mm	W mm	Y mm	Z mm	Inserts mm
160-180 (S)TV / PT / SL	58454229	79	45	60	42	9	15	39.5	29	60	M6	32 H8	9	30	11.5	3	17	25	30	17.5	7	5
200-225 (S)TV / PT / SL	58454239	109	65	80	62	9	16.5	49.5	39	80	M6	40 H8	9	40	11.5	4	17	25	30	17.5	7	7
250 TV	58454249	124	72	90	12	14	16.5	49.5	33	90	M6	50 H8	11	40	11.5	4	17	25	30	17.5	7	7
315 TV	58454259	160	90	120	82	12	15	49.5	31	106	M6	60 H8	13.5	40	11.5	4	17	25	30	17.5	7	11

All SinterGrip jaws: consisting of 1 piece of jaw, key T9 and mounting screws (depending on numbers of seats for SinterGrip), without SinterGrip inserts

Proximities for stroke control (optional)

2 sliding jaws:

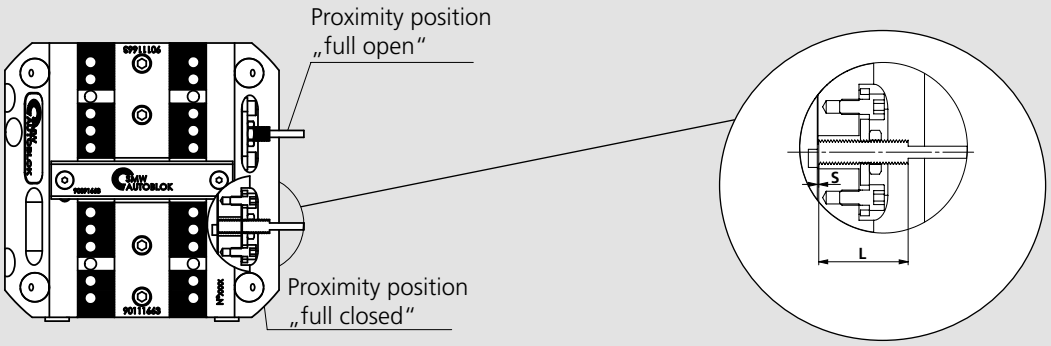

1 fixed jaw:

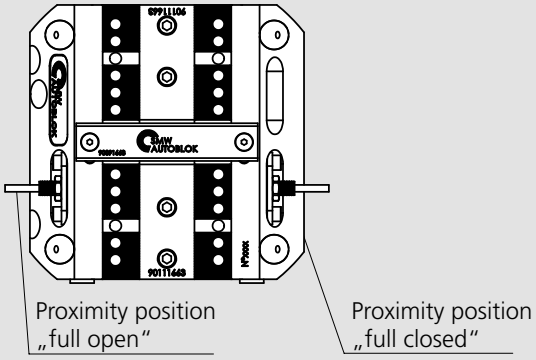

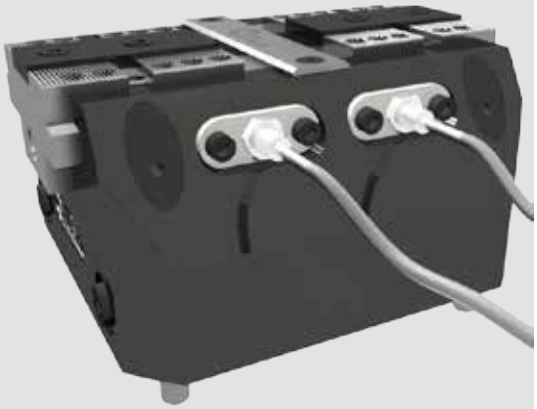

Twin vice Type	Thread	Sensor Balluff *	Omron alternative	Telemecanique alternative	S	L
100 TV	M5x0.5	BES516-3005-G-E4-C-PU02	E2EX1-B1	XS1N05PA310	0.5	20
160-200-250 TV	M8x1	BES516-324-G-E4-C-PU02	E2AS08KS02-WP-B12M	XS508B1PAL2	1	30
315 TV	M8x1	BESE08EF-PSC20B-BP02	E2AS08LS02-WP-B12M	XS508BLPAL2	1	40
125 STV-2	M5x0.5	BES516-3005-G-E4-C-PU02	E2EX1-B1	XS1N05PA310	0.5	20
180-225 STV-2	M8x1	BES516-324-G-E4-C-PU02	E2AS08KS02-WP-B12M	XS508B1PAL2	1	30
100-125 PT	M5x0.5	BES516-3005-G-E4-C-PU02	E2EX1-B1	XS1N05PA310	0.5	20
160-200 PT	M8x1	BES516-324-G-E4-C-PU02	E2AS08KS02-WP-B12M	XS508B1PAL2	1	30
100 / 160 SL	M8x1	BES516-324-549-C	-	-	-	40
200 SL	M8x1	BES516-324-SA33	-	-	-	53

* Recommended by SMW-AUTOBLOK

Pneumatic jaw stroke control valve

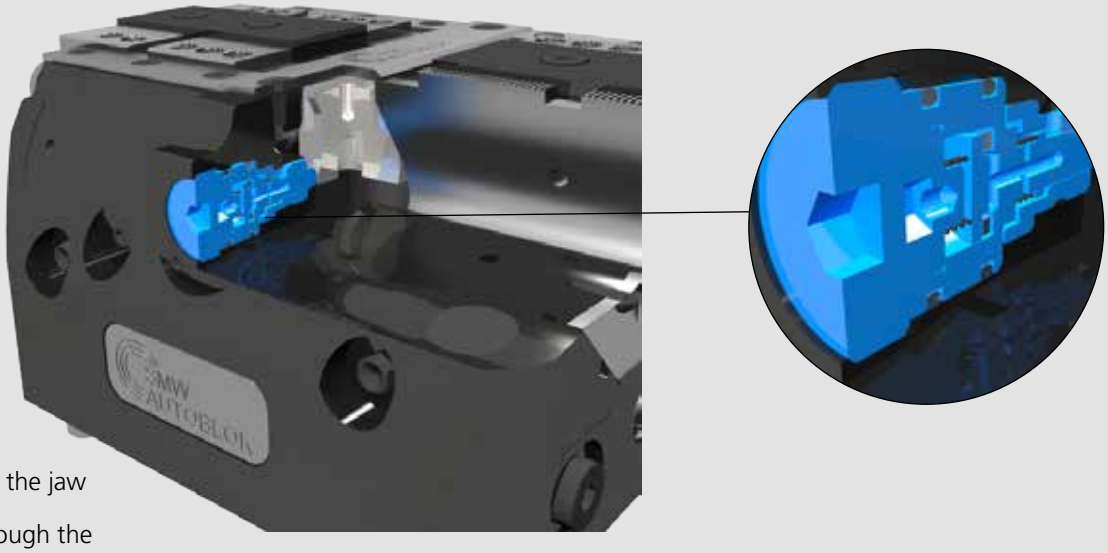

- For the monitoring of the jaw position
- Direct connection through the plate or the tombstone
- No cables needed
- Ideal for automation

Available for STV-2/STV-3 and PTP/PTH

Twin vice type	Id. No.
125 STV-2	90902283
180 STV-2	90902283
225 STV-2	90902283
180 STV-3	97901801
225 STV-3	97902204
100 PTP / PTH	90901163
125 PTP / PTH	90901763
160 PTP / PTH	90901763
200 PTP / PTH	90901763

Safety valve SAB-1

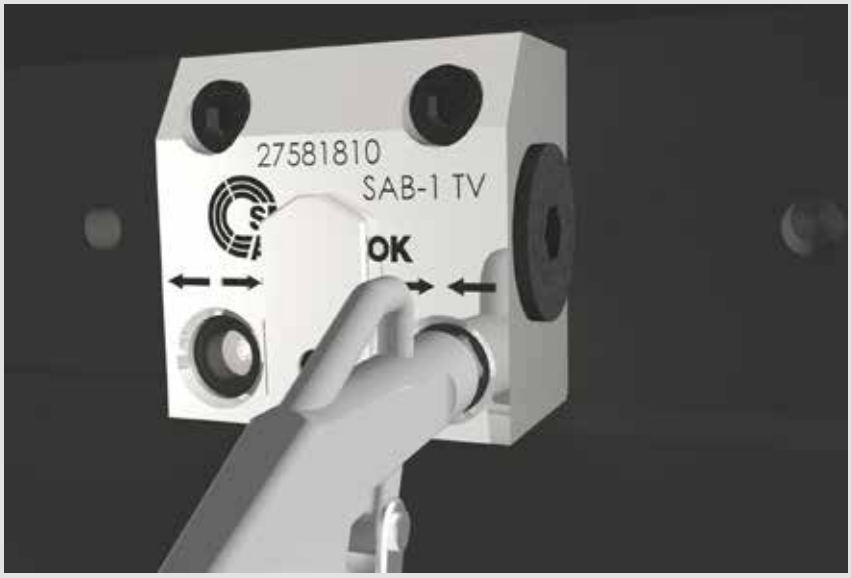

Safety valve SAB-1 to maintain air pressure during pallet transportation/storage and machining without feed

Available for STV-2/STV-3

Notes

Notes

Technical characteristics and dimensions are not obliged. OML S.r.l. may give in every time some modifications

MODULAR CLAMPING SYSTEMS

SMW AUTOBLOK

SINTERGRIP

APS

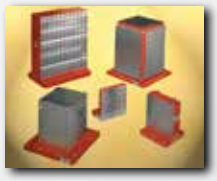
FMS

TC

MC

LC

CLAK SYSTEM

GENIUS

CIVI 2000

CAM SYSTEM

HOLDING CLAMPS

VARI CLAMP

DUO - LOCK

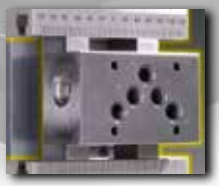
JAWS

SC

ST5-2G

FAST CLAMPS

TWIN VISE

CODE 10705872 - printed October 2018

OFFICINA MECCANICA LOMBARDA S.r.l.
Via Cristoforo Colombo, 5 - 27020 Travacò Siccomario (PV) - ITALY
Tel. +39 0382 55 96 13 - Fax +39 0382 55 99 42 - email: omlspa@omlspa.it - www.omlspa.it